Purdue University
Purdue e-Pubs

International Compressor Engineering Conference | School of Mechanical Engineering

2006

Acoustic Filters: Part I - Design and Analysis

Hubert Bukac
Little Dynamics

Follow this and additional works at: http://docs.lib.purdue.edu/icec

Bukac, Hubert, "Acoustic Filters: Part I - Design and Analysis" (2006). *International Compressor Engineering Conference.* Paper 1751.
http://docs.lib.purdue.edu/icec/1751

This document has been made available through Purdue e-Pubs, a service of the Purdue University Libraries. Please contact epubs@purdue.edu for additional information.
Complete proceedings may be acquired in print and on CD-ROM directly from the Ray W. Herrick Laboratories at https://engineering.purdue.edu/Herrick/Events/orderlit.html

ACOUSTIC FILTERS PART I: DESIGN AND ANALYSIS

Hubert Bukac
Little Dynamics, Inc., 21County Road 1238, Vinemont, AL 35179-6301, U.S.A
Tel.: (256) 775-2871, e-mail 1: hbukac@littledynamics.com

ABSTRACT

The application of the solution of the wave equation to model frequency characteristics of acoustical filters is reviewed. It was first applied by Davies et al. (1954). A version of this method, which is suitable for application on computers, was developed by Eversman (1987). It equates pressure and volume velocity at each boundary at which the acoustic duct changes its cross-section, or acoustic impedance. In this sense, the method can be considered as one-dimensional boundary element method. Its advantage over the four-pole parameter method is in that that it enables detailed view of the inside of the system. Standing waves of pressure and volume velocity can be calculated at any arbitrarily chosen location in the system for any frequency. Velocity of sound, density of gas and velocity of flow can be different in every part of the system. Furthermore, modeling and analysis of multiple parallel acoustic paths does not impose any difficulty.

1. INTRODUCTION

Although, the four-pole-parameter method is well-established method of analysis of acoustical filters, it has disadvantage in that it enables to model characteristics of acoustic filters between two points only, and that it is difficult to model multiple parallel acoustic paths. Originally, in the early 20th century, electrical engineers developed four-pole parameter method as a tool for analysis and design of passive electronic circuits. Because the same type of equation, the wave equation, describes both the propagation of electrical potential and electrical current along the line as well as, for example, the propagation of pressure and volume velocity in an acoustic duct. The acoustical engineers took advantage of the electro-acoustical analogy and adopted the method. The advantage of the four-pole-parameter-method is in that each acoustic element is fully described by a four times four matrix and in that that the matrix of a complete system is still four by four matrix that is obtained by cascading matrices of individual elements. This enabled the analysis to be done either analytically, or numerically, on a mechanical calculator, and later on early electronic computers that had small memory. The disadvantage is in that the complications arise when there is a need to analyze acoustic systems that contain multiple parallel acoustic paths. In addition, every change in design or configuration of a muffler requires new four-pole parameter model.

On the other hand, the results of the solution of the wave equation are complex amplitudes of both incident and reflective pressure waves in every location in an acoustic system. This enables detailed insight into the system, and easy modifications during design and analysis. Davis et al. (1954) used solution of the wave equation in the modeling of mufflers in their study of mufflers for engines. The essence of the method is equalization of pressures and volume velocities at each boundary where the acoustic duct changes its cross-section, or impedance. This method has two major obstacles. The first one is the solution of a system of linear equations in complex variables. The second one is a suitable algorithm that assembles system matrix from sub-matrices of individual acoustic elements. Eversman (1987) offers a version of an assembly algorithm and calls it “Acoustic Wave Finite Element,” or AWFE method. Basically, the assembly method presented here follows his approach. Elements are assigned serial numbers. Each element has inputs and outputs that are considered local wave systems. The acoustic wave that exists in each duct of constant cross-section that connects two individual elements is considered a global wave system. Each global wave system is assigned a serial number. The system of assembled equations is then solved for each angular frequency. Each model is solved only once. Any acoustical characteristic that exists between any two points of the system, such as attenuation, insertion loss, or a standing pressure wave, is then calculated in post processing.

2. THE WAVE EQUATION

For the sake of brevity, we neglect gas viscosity, heat dissipation, and velocity of steady flow of gas. If desired, these phenomena could be taken into account without any complications later. Under these assumptions, we can use classical one-dimensional wave equation that describes propagation of plane pressure waves along an acoustic duct. This equation, which can be found in any textbook on Acoustics is

$$\frac{\partial^2 p(x,t)}{\partial pt^2} - c\frac{\partial^2 p(x,t)}{\partial x^2} = p(t) \tag{1}$$

Where

p is pressure [Pa]
x is coordinate (positive in the direction of wave propagation) [m]
c is velocity of sound (may be the same throughout the system, or different in different parts of the system) [$m.s^{-1}$]
t is time [s]

The solution of equation (1) is

$$p(x,t) = \left[A \cdot e^{-j \cdot k \cdot x} + B \cdot e^{j \cdot k \cdot x}\right] \cdot e^{j \cdot \omega \cdot t} \tag{2}$$

Where

A is complex magnitude of propagating wave [Pa]
B is complex magnitude of reflected wave [Pa]
k is the wave number [m^{-1}]
ω is angular frequency [s^{-1}]
j is imaginary unit ($\sqrt{-1}$)

If the velocity of the flow of gas in the duct is considered, the wave number k will have two different values for the incident wave and reflected wave.

$$k_A = \frac{\omega}{c+w}, \qquad k_B = \frac{\omega}{c-w} \tag{3}$$

Where

k_A is wave number of incident wave [m^{-1}]
k_B is wave number of reflected wave [m^{-1}]
w is steady state velocity of flow of gas in the duct [$m.s^{-1}$]

We can write equation (1) also in terms of particle velocity. Therefore, its solution will have the same form as equation (2). Particle velocity and pressure are related together by the dynamic equilibrium

$$\rho \cdot \frac{\partial u}{\partial t} - \frac{\partial p}{\partial x} = 0 \tag{4}$$

Where

ρ is density of gas (may be the same throughout the system, or different in different parts of the system) [$kg.m^{-3}$=$N.s^2.m^{-4}$]
u is particle velocity [$m.s^{-1}$]

The particle velocity is

$$u(x,t) = \frac{1}{\rho \cdot c}\left[A \cdot e^{-j \cdot k \cdot x} - B \cdot e^{j \cdot k \cdot x}\right] \cdot e^{j \cdot \omega \cdot t} \tag{5}$$

The volume velocity is the particle velocity multiplied by the cross-section of the duct

$$v(x,t) = \frac{S}{\rho \cdot c}\left[A \cdot e^{-j \cdot k \cdot x} - B \cdot e^{j \cdot k \cdot x}\right] \cdot e^{j \cdot \omega \cdot t} \tag{6}$$

Where

S is area of cross-section of a duct [m^2]

3. ACOUSTIC ELEMENTS

An acoustic transmission line consists of three basic acoustic elements, acoustic drivers, termination elements, and multiple-input multiple-output elements. Several basic elements may create a combined acoustic element such as Helmholtz resonator with a wave structure.

3.1 Acoustic Drivers

Acoustic drivers are elements of zero length. Eversman (1987) defines three types of acoustic drivers.

The pressure driver has the matrix equation

$$\begin{bmatrix} 1, & 1 \end{bmatrix} \cdot \begin{Bmatrix} a \\ b \end{Bmatrix} = p \tag{7}$$

The volume velocity driver has the matrix equation

$$\begin{bmatrix} 1, & -1 \end{bmatrix} \cdot \begin{Bmatrix} a \\ b \end{Bmatrix} = \frac{\rho \cdot c}{S} \cdot v \tag{8}$$

The volume acceleration driver has the matrix equation

$$\begin{bmatrix} 1, & -1 \end{bmatrix} \cdot \begin{Bmatrix} a \\ b \end{Bmatrix} = \frac{1}{j \cdot \omega} \cdot \frac{\rho \cdot c}{S} \cdot \dot{v} \tag{9}$$

Any type of driver can be used to excite the system.

3.2 Termination Elements

Every acoustic transmission line has to be terminated by acoustic impedance. A termination element has the length that is equal to the distance between the end of pipe and previous element. Four types of acoustic duct termination elements may be useful. Matrix equation of any type of termination element has to satisfy equation

$$\begin{bmatrix} \left(\frac{\rho \cdot c}{S} - Z\right) \cdot e^{-j \cdot k \cdot l}, & \left(\frac{\rho \cdot c}{S} + Z\right) \cdot e^{j \cdot k \cdot l} \end{bmatrix} \cdot \begin{Bmatrix} a \\ b \end{Bmatrix} = 0 \tag{10}$$

Where

Z is terminating impedance [N.s.m^{-5}]

l is length of terminating pipe [m]

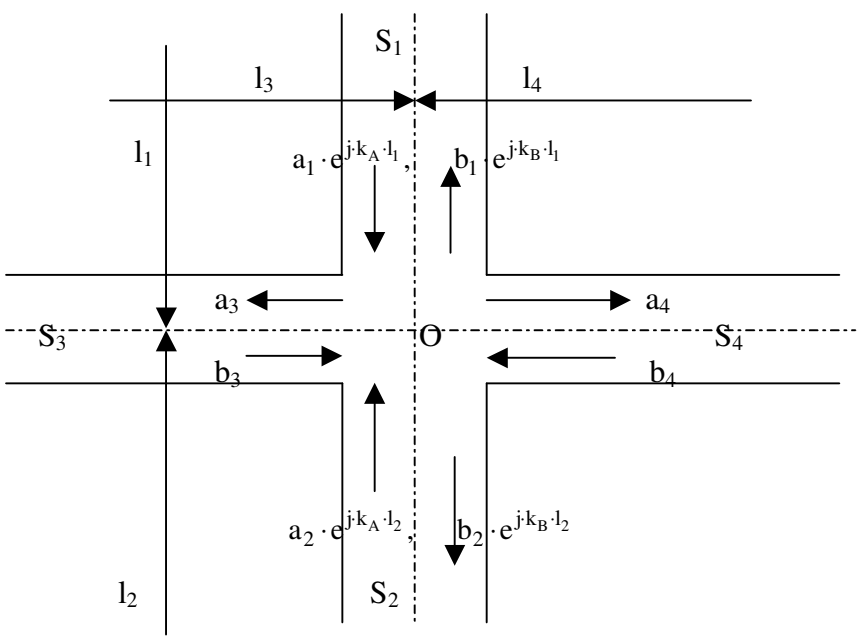

Fig. 1: Two-input two-output element

The values of Z in equation (10) are:
Z = 0, for open pipe, or pressure release termination

Z = $\frac{\rho \cdot c}{S}$, for anechoic termination

Z = Z_T, for a given impedance Z_T
Z = ∞ , for closed pipe

3.3 Multiple-Input Multiple-Output Element

The expansion and contraction elements are the simplest inside the system elements. In general, an inside element of a multiple branched acoustic system may have n inputs and m outputs. As an example, we derive matrix equation of element that has two inputs and two outputs, Fig. 1.

The three independent equations that equates pressure at the junction point O are

$$a_1 \cdot e^{-j \cdot k_{A1} \cdot l_1} + b_1 \cdot e^{j \cdot k_{B1} \cdot l_1} = a_2 \cdot e^{-j \cdot k_{A2} \cdot l_2} + b_2 \cdot e^{j \cdot k_{B2} \cdot l_2} \tag{11a}$$

$$a_2 \cdot e^{-j \cdot k_{A2} \cdot l_2} + b_2 \cdot e^{j \cdot k_{B2} \cdot l_2} = a_3 + b_3 \tag{11b}$$

$$a_3 + b_3 = a_4 + b_4 \tag{11c}$$

Where
l_i is the length of the i-th input of the element, i = 1,2,….

The law of conservation of mass means the total volume of gas that moves into the junction must be equal to the volume of gas that leaves the junction. Thus, for the junction O in Fig. 1 we have

$$\frac{S_1}{\rho_1 \cdot c_1}\left(a_1 \cdot e^{jk_{A1}l_1} - b_1 e^{jk_{B1}l_1}\right) + \frac{S_2}{\rho_2 \cdot c_2}\left(a_2 e^{jk_{A2}l_2} - b_2 e^{jk_{B2}l_2}\right) = \frac{S_3}{\rho_3 \cdot c_3}\left(a_3 - b_3\right) + \frac{S_4}{\rho_4 \cdot c_4}\left(a_4 - b_4\right) \tag{11d}$$

For the sake of generalization, we also assume that the density of gas and velocity of sound in the gas is different in each branch of the junction.

In the matrix form, equations (11) are

$$\begin{bmatrix} e^{-j \cdot k_{A1} \cdot l_1}, & e^{j \cdot k_{B1} \cdot l_1}, & -e^{-j \cdot k_{A2} \cdot l_2}, & e^{j \cdot k_{B2} \cdot l_2}, & 0, & 0, & 0, & 0 \\ 0, & 0, & e^{-j \cdot k_{A2} \cdot l_2}, & e^{j \cdot k_{B2} \cdot l_2}, & -1, & -1, & 0, & 0 \\ 0, & 0, & 0, & 0, & 1, & 1, & -1, & -1 \\ \frac{S_1}{\rho_1 c_1} e^{-j \cdot k_{A1} \cdot l_1}, & \frac{S_1}{\rho_1 c_1} e^{j \cdot k_{B1} \cdot l_1}, & \frac{S_2}{\rho_2 c_2} e^{-j \cdot k_{A2} \cdot l_2}, & \frac{S_2}{\rho_2 c_2} e^{j \cdot k_{B1} \cdot l_2}, & \frac{-S_3}{\rho_3 c_3}, & \frac{S_3}{\rho_3 c_3}, & \frac{-S_4}{\rho_4 c_4}, & \frac{S_4}{\rho_4 c_4} \end{bmatrix} \cdot \begin{Bmatrix} a_1 \\ b_1 \\ a_2 \\ b_2 \\ a_3 \\ b_3 \\ a_4 \\ b_4 \end{Bmatrix} = \{0\} \tag{12}$$

We can abridge equation (12) by writing

$$[D] \cdot \{a\} = \{F\} \tag{13}$$

Where
[D] is (n+m) x 2(n+m) rectangular matrix of i-th element
{a} is 2(n+m) column matrix of pairs of local waves of i-it element
{F} is 2(n+m) column matrix (except the driver all elements of {F} are zero)

Generally, a multiple branched junction element that has n inputs and m outputs will have n + m equations from which n + m - 1 equations of pressure equilibrium, and one equation of equilibrium of volume velocities.

3.4 Assembly Procedure

We have defined all possible elements the can form a branched acoustic transmission line. Fig. 2 shows a simple expansion chamber muffler with termination impedance Z. The model of this muffler consists of four acoustic elements and three global wave systems. Elements are assigned numbers in circles, while numbers in rectangles

indicate global wave systems. The system has N = 3 pairs of global waves. In order to be able to find unknown complex constants A and B of three pairs of global waves, we need to assemble elements into a system matrix. We will follow assembly procedure proposed by Eversman (1987). The matrix equation of the assembled system is

$$[E]\cdot\{G\}=\{F\} \tag{14}$$

Where

[E] is a 2.N x 2.N square system matrix that has to be assembled

{G} is N x 1 column matrix of unknown pairs of complex wave constants (A_i and B_i)

N is number of wave systems

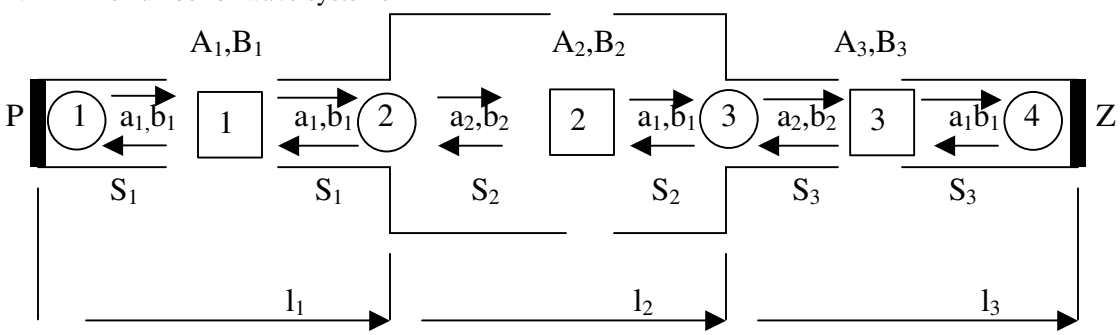

Fig. 2.: Simple expansion chamber muffler with termination

We may use local waves systems of each element and assemble matrices of all elements into one matrix, and the equation (14) can be written as

$$\begin{bmatrix} [D_1] & & & \\ & [D_2] & & \\ & & [D_3] & \\ & & & [D_4] \end{bmatrix}\cdot\begin{bmatrix} \begin{Bmatrix} a_1 \\ b_1 \end{Bmatrix}_1 \\ \vdots \\ \begin{Bmatrix} a_1 \\ b_1 \end{Bmatrix}_4 \end{bmatrix}=\begin{Bmatrix} P \\ \vdots \\ 0 \\ 0 \end{Bmatrix} \tag{15}$$

This does not enable us to solve equation (14) for {A}. In order to be able to do that, we need to find relation between {a} and {G}. This relation is done by the connectivity matrix [C]

$$\{a\}=[C]\cdot\{G\} \tag{16}$$

We can expand equation (16) to get

$$\begin{Bmatrix} \begin{Bmatrix} a_1 \\ b_1 \end{Bmatrix}_1 \\ \begin{Bmatrix} a_1 \\ b_1 \\ a_2 \\ b_2 \end{Bmatrix}_2 \\ \begin{Bmatrix} a_1 \\ b_1 \\ a_2 \\ b_2 \end{Bmatrix}_3 \\ \begin{Bmatrix} a_1 \\ b_1 \end{Bmatrix}_4 \end{Bmatrix}=\begin{array}{c} \begin{array}{cccccc} A_1 & B_1 & A_2 & B_2 & A_3 & B_3 \end{array} \\ \begin{bmatrix} 1 & 0 & 0 & 0 & 0 & 0 \\ 0 & 1 & 0 & 0 & 0 & 0 \\ 1 & 0 & 0 & 0 & 0 & 0 \\ 0 & 1 & 0 & 0 & 0 & 0 \\ 0 & 0 & 1 & 0 & 0 & 0 \\ 0 & 0 & 0 & 1 & 0 & 0 \\ 0 & 0 & 1 & 0 & 0 & 0 \\ 0 & 0 & 0 & 1 & 0 & 0 \\ 0 & 0 & 0 & 0 & 1 & 0 \\ 0 & 0 & 0 & 0 & 0 & 1 \\ 0 & 0 & 0 & 0 & 1 & 0 \\ 0 & 0 & 0 & 0 & 0 & 0 \end{bmatrix} \end{array}\cdot\begin{Bmatrix} A_1 \\ B_1 \\ A_2 \\ B_2 \\ A_3 \\ B_3 \end{Bmatrix} \tag{17}$$

The creation of connectivity matrix is straightforward. Matrix [C] in equation (17) has 2(n+m) =12 rows and 2N=6 columns. Number one is placed in the cross section of a row and a column whenever any a_i component of local wave of the element coincides with A_j component of global wave. Similarly, number one is placed in the cross section of a row and a column whenever any b_i component of local wave coincides with B_j component of global wave.

When we substitute {a} from equation (16) into equation (13) we get

$$[D]\cdot[C]\cdot\{G\}=\{F\} \tag{18}$$

Obviously, by comparing equations (16) and (14), the system matrix is

$$[E]=[D]\cdot[C] \tag{19}$$

The vector of unknown amplitudes of global wave systems is

$$\{G\}=[E]^{-1}\cdot\{F\} \tag{20}$$

Numbering of elements of global and local wave systems does not have to be in any specific order, it may be even chaotic. The only rule that must be followed is that the order of row-blocks of sub-matrices and $\{a\}_i$ on the left of equation (17) must be the same as the row order of element of sub-matrices $[D_i]$ in equation (15). It has to be emphasized all the elements in all matrices in equation (20) are complex numbers, and that equation (20) has to be solved for every frequency.

Once all the complex amplitudes of incident and reflected wave are known, we can use them to find any possible acoustic characteristic (too many to list) of a complete muffler, or of any of its internal block of acoustic elements. We can even find magnitudes of pressure and volume velocity of i-th global wave in any connection between two elements

$$p_i(\omega,x_i)=A_i(\omega)\cdot e^{-j\cdot k_i\cdot x_i}+B_i(\omega)\cdot e^{j\cdot k_i\cdot x_i} \tag{21}$$

$$v_i(\omega,x_i)=\frac{S_i}{\rho_i\cdot c_i}\left(A_i(\omega)\cdot e^{-j\cdot k_i\cdot x_i}-B_i(\omega)\cdot e^{j\cdot k_i\cdot x_i}\right) \tag{22}$$

This is very useful in design of mufflers because we can find nodes and antinodes of standing wave of any particular frequency of interest. It will enable us to choose points where to locate branches that will not transmit that particular frequency.

4. DESIGN AND ANALYSIS

As an example of the design and analysis procedure, we will design and analyze muffler for a two-cylinder compressor that has to have attenuation of at least 40dB in the frequency range 100Hz 1500Hz.

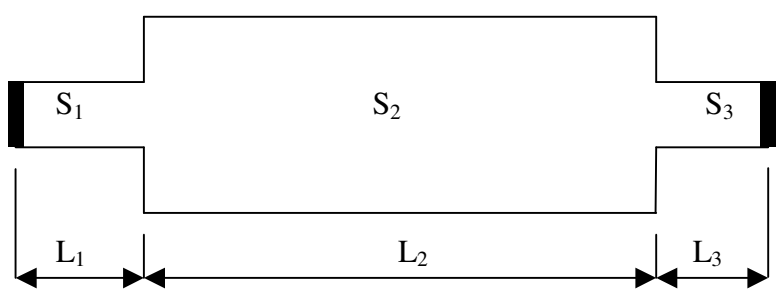

Fig.3: Simple expansion chamber muffler

We start with a simple expansion chamber that has zero attenuation at the frequency f=0 and $f=c/2L_2$, where L_2 is length of chamber, Fig. 3. The attenuation of a simple expansion chamber muffler is seen in Fig. 7. This expansion chamber has zero attenuation at 1250 Hz. The standing wave of 2500 Hz has its node just at the center of the chamber. Therefore, we add a branch at the center of the chamber, Fig 4. The termination of the chamber is now closed pipe termination.

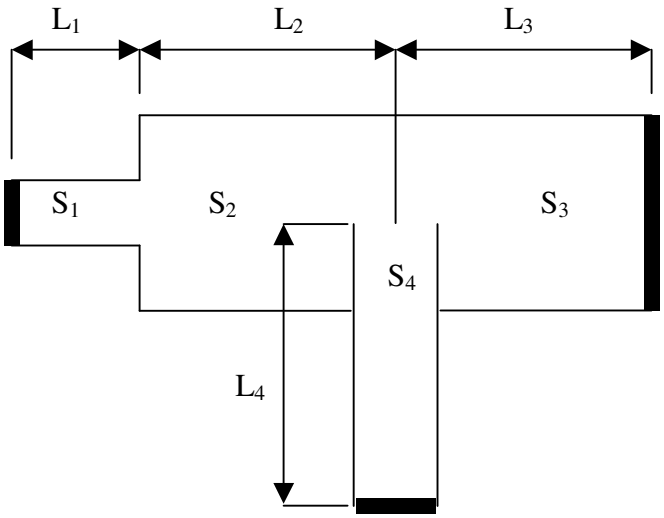

Fig. 4: Expansion chamber with central outlet

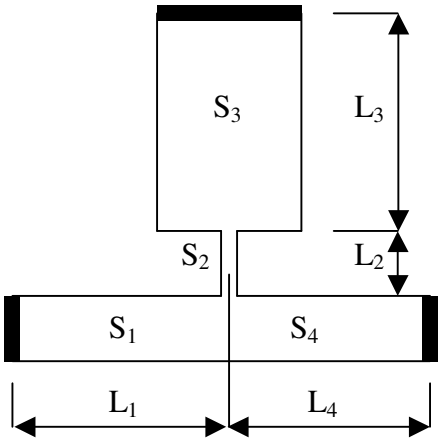

Fig. 5: Helmholtz Resonator

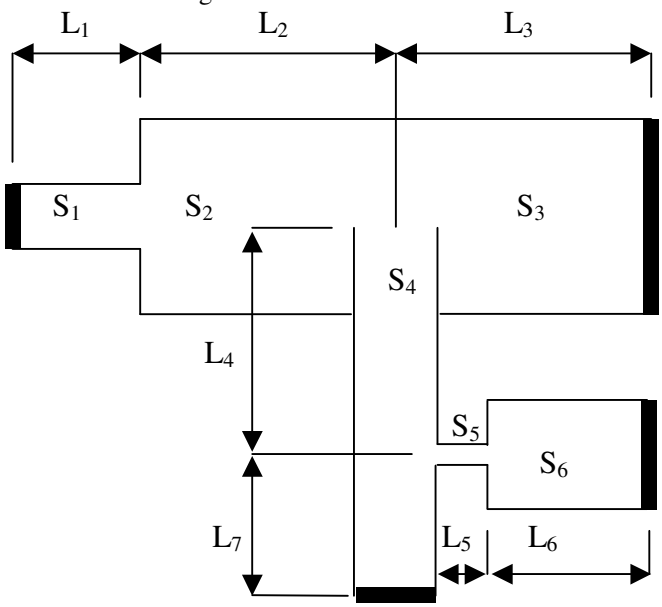

Fig. 6: Combination muffler

The attenuation of an expansion chamber with central outlet eliminates drop in attenuation at 1250 Hz. But the attenuation at low frequencies is still less than required 40 dB. In order to improve attenuation at low frequencies, we add a Helmholtz resonator. Usually, the Helmholtz resonator is located at the beginning of the acoustical transmission line. In this case, because of the space considerations, the Helmholtz resonator is added at the end of the line. Before we attached Helmholtz resonator to the system, we modeled its attenuation separately, Fig. 5. There is a plenty of literature dealing with design of Helmholtz resonators. We do not need to use any closed formula to calculate frequency and magnitude of attenuation of a Helmholtz resonator. Instead, the Helmholtz resonator is modeled as an acoustical line using the above method. This method takes into consideration internal wave structure of the Helmholtz resonator. The attenuation of Helmholtz resonator with wave reflections is also seen in Fig. 7. The attenuation of the combination muffler that consists of expansion chamber with central outlet and Helmholtz resonator is in Fig. 7. As it was required, the muffler has attenuation of at least 40 dB in the range 100Hz – 1500 Hz.

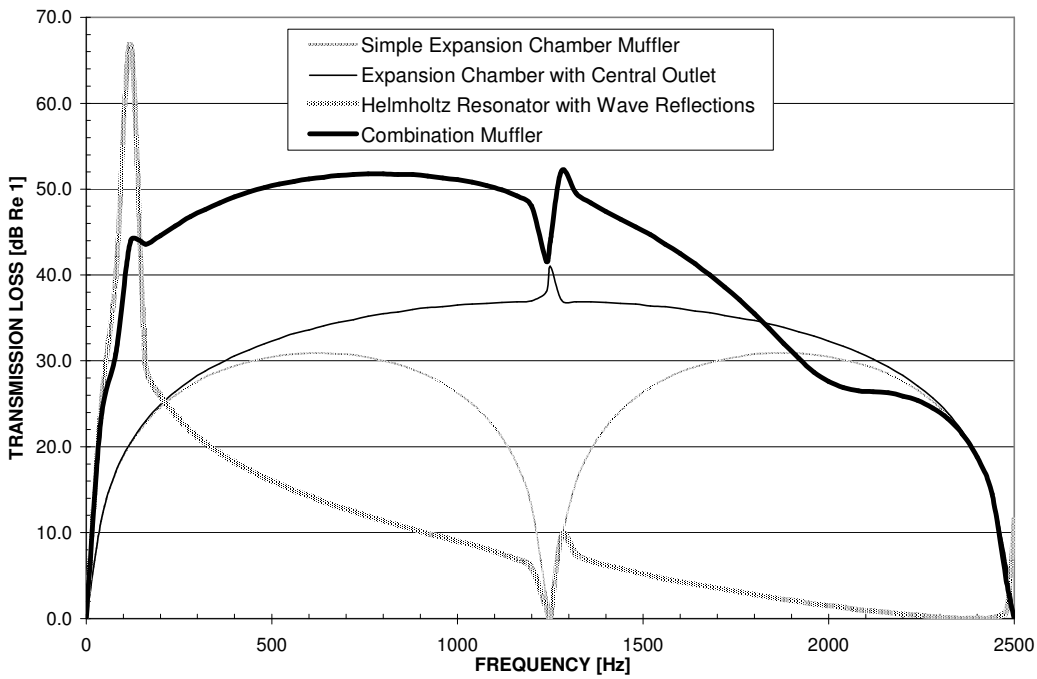

Fig. 7: Transmission loss

5. CONCLUSIONS

A systematic solution of the wave equation offers very flexible tool in analysis and design of mufflers for compressors. Knowledge of complex amplitudes of incident and reflective waves throughout an acoustic transmission line enables us to calculate all possible characteristics of mufflers. The method is superior to the four-pole parameter, or transfer matrix method, because it describes all the system, while four-pole parameter or transfer matrix methods relate together pressure and volume velocities at two locations of the acoustic system.

REFERENCES

Davis, D., et. al., 1954. Theoretical and experimental Investigation of Mufflers with Comments on Engine Exhaust Muffler Design, *NACA Report 1192*.

Eversman, W., 1987, A Systematic Procedure for the Analysis of Multiply Branched Acoustics Transmission Lines, *Transactions of the ASME*, 168, Vol. 109, April 1987.

United States Patents: *5,101,931; 5,129,743; 5,205,719; 5,341,654.*