*Physics*

*Physics Research Publications*

*Purdue University* *Year* 2010

# Commissioning of the CMS experiment and the cosmic run at four tesla

S. Chatrchyan, V. Khachatryan, A. M. Sirunyan, W. Adam, B. Arnold, H. Bergauer, T. Bergauer, M. Dragicevic, M. Eichberger, J. Ero, M. Friedl, R. Fruhwirth, V. M. Ghete, J. Hammer, S. Hansel, M. Hoch, N. Hormann, J. Hrubec, M. Jeitler, G. Kasieczka, K. Kastner, M. Krammer, D. Liko, I. M. de Abril, I. Mikulec, F. Mittermayr, B. Neuherz, M. Oberegger, M. Padrta, M. Pernicka, H. Rohringer, S. Schmid, R. Schofbeck, T. Schreiner, R. Stark, H. Steininger, J. Strauss, A. Taurok, F. Teischinger, T. Themel, D. Uhl, P. Wagner, W. Waltenberger, G. Walzel, E. Widl, C. E. Wulz, V. Chekhovsky, O. Dvornikov, I. Emeliantchik, A. Litomin, V. Makarenko, I. Marfin, V. Mossolov, N. Shumeiko, A. Solin, R. Stefanovitch, J. S. Gonzalez, A. Tikhonov, A. Fedorov, A. Karneyeu, M. Korzhik, V. Panov, R. Zuyeuski, P. Kuchinsky, W. Beaumont, L. Benucci, M. Cardaci, E. A. De Wolf, E. Delmeire, D. Druzhkin, M. Hashemi, X. Janssen, T. Maes, L. Mucibello, S. Ochesanu, R. Rougny, M. Selvaggi, H. Van, Haevermaet, P. Van Mechelen, N. Van Remortel, V. Adler, S. Beauceron, S. Blyweert, J. D'Hondt, S. De Weirdt, O. Devroede, J. Heyninck, A. Kalogeropoulos, J. Maes, M. Maes, M. U. Mozer, S. Tavernier, W. Van Doninck, P. Van Mulders, I. Villella, O. Bouhali, E. C. Chabert, O. Charaf, B. Clerbaux, G. De Lentdecker, V. Dero, S. Elgammal, A. P. R. Gay, G. H. Hammad, P. E. Marage, S. Rugovac, C. Vander Velde, P. Vanlaer, J. Wickens, M. Grunewald, B. Klein, A. Marinov, D. Ryckbosch, F. Thyssen, M. Tytgat, L. Vanelderen, P. Verwilligen, S. Basegmez, G. Bruno, J. Caudron, C. Delaere, P. Demin, D. Favart, A. Giammanco, G. Gregoire, V. Lemaitre, O. Militaru, S. Ovyn, K. Piotrzkowski, L. Quertenmont, N. Schul, N. Beliy, E. Daubie, G. A. Alves, M. E. Pol, M. H. G. Souza, W. Carvalho, D. D. Damiao, C. D. Martins, S. F. De Souza, L. Mundim, V. Oguri, A. Santoro, S. M. S. Do Amaral, A. Sznajder, Trfp Tomei, M. A. F. Dias, E. M. Gregores, S. F. Novaes, K. Abadjiev, T. Anguelov, J. Damgov, N. Darmenov, L. Dimitrov, V. Genchev, P. Iaydjiev, S. Piperov, S. Stoykova, G. Sultanov, R. Trayanov, I. Vankov, A. Dimitrov, M. Dyulendarova, V. Kozhuharov, L. Litov, E. Marinova, M. Mateev, B. Pavlov, P. Petkov, Z. Toteva, G. M. Chen, H. S. Chen, W. Guan, C. H. Jiang, D. Liang, B. Liu, X. Meng, J. Tao, J. Wang, Z. Wang, Z. Xue, Z. Zhang, Y. Ban, J. Cai, Y. Ge, S. Guo, Z. Hu, Y. Mao, S. J. Qian, H. Teng, B. Zhu, C. Avila, M. B. Ruiz, C. A.

C. Montoya, A. Gomez, B. G. Moreno, A. A. O. Rios, A. F. O. Oliveros, D. R. Romero, J. C. Sanabria, N. Godinovic, K. Lelas, R. Plestina, D. Polic, I. Puljak, Z. Antunovic, M. Dzelalija, V. Brigljevic, S. Duric, K. Kadija, S. Morovic, R. Fereos, M. Galanti, J. Mousa, A. Papadakis, F. Ptochos, P. A. Razis, D. Tsiakkouri, Z. Zinonos, A. Hektor, M. Kadastik, K. Kannike, M. Muntel, M. Raidal, L. Rebane, E. Anttila, S. Czellar, J. Harkonen, A. Heikkinen, V. Karimaki, R. Kinnunen, J. Klem, M. J. Kortelainen, T. Lampen, K. Lassila-Perini, S. Lehti, T. Linden, P. Luukka, T. Maenpaa, J. Nysten, E. Tuominen, J. Tuominiemi, D. Ungaro, L. Wendland, K. Banzuzi, A. Korpela, T. Tuuva, P. Nedelec, D. Sillou, M. Besancon, R. Chipaux, M. Dejardin, D. Denegri, J. Descamps, B. Fabbro, J. L. Faure, F. Ferri, S. Ganjour, F. X. Gentit, A. Givernaud, P. Gras, G. H. de Monchenault, P. Jarry, M. C. Lemaire, E. Locci, J. Malcles, M. Marionneau, L. Millischer, J. Rander, A. Rosowsky, D. Rousseau, M. Titov, P. Verrecchia, S. Baffioni, L. Bianchini, M. Bluj, P. Busson, C. Charlot, L. Dobrzynski, R. G. de Cassagnac, M. Haguenauer, P. Mine, P. Paganini, Y. Sirois, C. Thiebaux, A. Zabi, J. L. Agram, A. Besson, D. Bloch, D. Bodin, J. M. Brom, E. Conte, F. Drouhin, J. C. Fontaine, D. Gele, U. Goerlach, L. Gross, P. Juillot, A. C. Le Bihan, Y. Patois, J. Speck, P. Van Hove, C. Baty, M. Bedjidian, J. Blaha, G. Boudoul, H. Brun, N. Chanon, R. Chierici, D. Contardo, P. Depasse, T. Dupasquier, H. El Mamouni, F. Fassi, J. Fay, S. Gascon, B. Ille, T. Kurca, T. Le Grand, M. Lethuillier, N. Lumb, L. Mirabito, S. Perries, M. Vander Donckt, P. Verdier, N. Djaoshvili, N. Roinishvili, V. Roinishvili, N. Amaglobeli, R. Adolphi, G. Anagnostou, R. Brauer, W. Braunschweig, M. Edelhoff, H. Esser, L. Feld, W. Karpinski, A. Khomich, K. Klein, N. Mohr, A. Ostaptchouk, D. Pandoulas, G. Pierschel, F. Raupach, S. Schael, A. S. von Dratzig, G. Schwering, D. Sprenger, M. T. M. Weber, B. Wittmer, M. Wlochal, O. Actis, G. Altenhofer, W. Bender, P. Biallass, M. Erdmann, G. Fetchenhauer, J. Frangenheim, T. Hebbeker, G. Hilgers, A. Hinzmann, K. Hoepfner, C. Hof, M. Kirsch, T. Klimkovich, P. Kreuzer, D. Lanske, M. Merschmeyer, A. Meyer, B. Philipps, H. Pieta, H. Reithler, S. A. Schmitz, L. Sonnenschein, M. Sowa, J. Steggemann, H. Szczesny, D. Teyssier, C. Zeidler, M. Bontenackels, M. Davids, M. Duda, G. F. Ugge, H. Geenen, M. Giffels, W. H. Ahmad, T. Hermanns, D. Heydhausen, S. Kalinin, T. Kress, A. Linn, A. Nowack, L. Perchalla, M. Poettgens, O. Pooth, P. Sauerland, A. Stahl, D. Tornier, M. H. Zoeller, M. A. Martin, U. Behrens, K. Borras, A. Campbell, E. Castro, D. Dammann, G. Eckerlin, A. Flossdorf, G. Flucke, A. Geiser, D. Hatton, J. Hauk, H. Jung, M. Kasemann, I. Katkov, C. Kleinwort, H. Kluge, A. Knutsson, E. Kuznetsova, W. Lange, W. Lohmann, R. Mankel, M. Marienfeld, A. B. Meyer, S. Miglioranzi, J. Mnich, M. Ohlerich, J. Olzem, A. Parenti, C. Rosemann, R. Schmidt, T. Schoerner-Sadenius, D. Volyanskyy, C. Wissing, W. D. Zeuner, C. Autermann, F. Bechtel, J. Draeger, D. Eckstein, U. Gebbert, K. Kaschube, G. Kaussen, R. Klanner, B. Mura, S. Naumann-Emme, F. Nowak, U. Pein, C. Sander, P. Schleper, T. Schum, H. Stadie, G. S. Uck, J. Thomsen, R. Wolf, J. Bauer, P. Blum, V. Buege, A. Cakir, T. Chwalek, W. De Boer, A. Dierlamm, G. Dirkes, M. Feindt, U. Felzmann, M. Frey, A. Furgeri, J. Gruschke, C. Hackstein, F. Hartmann, S. Heier, M. Heinrich, H. Held, D. Hirschbuehl, K. H. Hoffmann, S. Honc, C. Jung, T. Kuhr, T. Liamsuwan,

D. Martschei, S. Mueller, T. Muller, M. B. Neuland, M. Niegel, O. Oberst, A. Oehler, J. Ott, T. Peiffer, D. Piparo, G. Quast, K. Rabbertz, F. Ratnikov, N. Ratnikova, M. Renz, C. Saout, G. Sartisohn, A. Scheurer, P. Schieferdecker, F. P. Schilling, G. Schott, H. J. Simonis, F. M. Stober, P. Sturm, D. Troendle, A. Trunov, W. Wagner, J. Wagner-Kuhr, M. Zeise, V. Zhukov, E. B. Ziebarth, G. Daskalakis, T. Geralis, K. Karafasoulis, A. Kyriakis, D. Loukas, A. Markou, C. Markou, C. Mavrommatis, E. Petrakou, A. Zachariadou, L. Gouskos, P. Katsas, A. Panagiotou, I. Evangelou, P. Kokkas, N. Manthos, I. Papadopoulos, V. Patras, F. A. Triantis, G. Bencze, L. Boldizsar, G. Debreczeni, C. Hajdu, S. Hernath, P. Hidas, D. Horvath, K. Krajczar, A. Laszlo, G. Patay, F. Sikler, N. Toth, G. Vesztergombi, N. Beni, G. Christian, J. Imrek, J. Molnar, D. Novak, J. Palinkas, G. Szekely, Z. Szillasi, K. Tokesi, V. Veszpremi, A. Kapusi, G. Marian, P. Raics, Z. Szabo, Z. L. Trocsanyi, B. Ujvari, G. Zilizi, S. Bansal, H. S. Bawa, S. B. Beri, V. Bhatnagar, M. Jindal, M. Kaur, R. Kaur, J. M. Kohli, M. Z. Mehta, N. Nishu, L. K. Saini, A. Sharma, A. Singh, J. B. Singh, S. P. Singh, S. Ahuja, S. Arora, S. Bhattacharya, S. Chauhan, B. C. Choudhary, P. Gupta, S. Jain, M. Jha, A. Kumar, K. Ranjan, R. K. Shivpuri, A. K. Srivastava, R. K. Choudhury, D. Dutta, S. Kailas, S. K. Kataria, A. K. Mohanty, L. M. Pant, P. Shukla, A. Topkar, T. Aziz, M. Guchait, A. Gurtu, M. Maity, D. Majumder, G. Majumder, K. Mazumdar, A. Nayak, A. Saha, K. Sudhakar, S. Banerjee, S. Dugad, N. K. Mondal, H. Arfaei, H. Bakhshiansohi, A. Fahim, A. Jafari, M. M. Najafabadi, A. Moshaii, S. P. Mehdiabadi, S. Rouhani, B. Safarzadeh, M. Zeinali, M. Felcini, M. Abbrescia, L. Barbone, F. Chiumarulo, A. Clemente, A. Colaleo, D. Creanza, G. Cuscela, N. De Filippis, M. De Palma, G. De Robertis, G. Donvito, F. Fedele, L. Fiore, M. Franco, G. Iaselli, N. Lacalamita, F. Loddo, L. Lusito, G. Maggi, M. Maggi, N. Manna, B. Marangelli, S. My, S. Natali, S. Nuzzo, G. Papagni, S. Piccolomo, G. A. Pierro, C. Pinto, A. Pompili, G. Pugliese, R. Rajan, A. Ranieri, F. Romano, G. Roselli, G. Selvaggi, Y. Shinde, L. Silvestris, S. Tupputi, G. Zito, G. Abbiendi, W. Bacchi, A. C. Benvenuti, M. Boldini, D. Bonacorsi, S. Braibant-Giacomelli, V. D. Cafaro, S. S. Caiazza, P. Capiluppi, A. Castro, F. R. Cavallo, G. Codispoti, M. Cuffiani, I. D'Antone, G. M. Dallavalle, F. Fabbri, A. Fanfani, D. Fasanella, P. Giacomelli, V. Giordano, M. Giunta, C. Grandi, M. Guerzoni, S. Marcellini, G. Masetti, A. Montanari, F. L. Navarria, F. Odorici, G. Pellegrini, A. Perrotta, A. M. Rossi, T. Rovelli, G. Siroli, G. Torromeo, R. Travaglini, S. Albergo, S. Costa, R. Potenza, A. Tricomi, C. Tuve, G. Barbagli, G. Broccolo, V. Ciulli, C. Civinini, R. D'Alessandro, E. Focardi, S. Frosali, E. Gallo, C. Genta, G. Landi, P. Lenzi, M. Meschini, S. Paoletti, G. Sguazzoni, A. Tropiano, L. Benussi, M. Bertani, S. Bianco, S. Colafranceschi, D. Colonna, M. Giardoni, L. Passamonti, D. Piccolo, D. Pierluigi, B. Ponzio, A. Russo, P. Fabbricatore, R. Musenich, A. Benaglia, M. Calloni, G. B. Cerati, P. D'Angelo, F. De Guio, F. M. Farina, A. Ghezzi, P. Govoni, M. Malberti, S. Malvezzi, A. Martelli, D. Menasce, V. Miccio, L. Moroni, P. Negri, M. Paganoni, D. Pedrini, A. Pullia, S. Ragazzi, N. Redaelli, S. Sala, R. Salerno, T. T. de Fatis, V. Tancini, S. Taroni, S. Buontempo, N. Cavallo, A. Cimmino, M. De Gruttola, F. Fabozzi, A. O. M. Iorio, L. Lista, D. Lomidze, P. Noli, P. Paolucci, C. Sciacca, P. Azzi, N. Bacchetta, L. Barcellan, P. Bellan, M. Bellato,

M. Benettoni, M. Biasotto, D. Bisello, E. Borsato, A. Branca, R. Carlin, L. Castellani, P. Checchia, E. Conti, F. Dal Corso, M. De Mattia, T. Dorigo, U. Dosselli, F. Fanzago, F. Gasparini, U. Gasparini, P. Giubilato, F. Gonella, A. Gresele, M. Gulmini, A. Kaminskiy, S. Lacaprara, I. Lazzizzera, M. Margoni, G. Maron, S. Mattiazzo, M. Mazzucato, M. Meneghelli, A. T. Meneguzzo, M. Michelotto, F. Montecassiano, M. Nespolo, M. Passaseo, M. Pegoraro, L. Perrozzi, N. Pozzobon, P. Ronchese, F. Simonetto, N. Toniolo, E. Torassa, M. Tosi, A. Triossi, S. Vanini, S. Ventura, P. Zotto, G. Zumerle, P. Baesso, U. Berzano, S. Bricola, M. M. Necchi, D. Pagano, S. P. Ratti, C. Riccardi, P. Torre, A. Vicini, P. Vitulo, C. Viviani, D. Aisa, S. Aisa, E. Babucci, M. Biasini, G. M. Bilei, B. Caponeri, B. Checcucci, N. Dinu, L. Fano, L. Farnesini, P. Lariccia, A. Lucaroni, G. Mantovani, A. Nappi, A. Piluso, V. Postolache, A. Santocchia, L. Servoli, D. Tonoiu, A. Vedaee, R. Volpe, P. Azzurri, G. Bagliesi, J. Bernardini, L. Berretta, T. Boccali, A. Bocci, L. Borrello, F. Bosi, F. Calzolari, R. Castaldi, R. Dell'Orso, F. Fiori, L. Foa, S. Gennai, A. Giassi, A. Kraan, F. Ligabue, T. Lomtadze, F. Mariani, L. Martini, M. Massa, A. Messineo, A. Moggi, F. Palla, F. Palmonari, G. Petragnani, G. Petrucciani, F. Raffaelli, S. Sarkar, G. Segneri, A. T. Serban, P. Spagnolo, R. Tenchini, S. Tolaini, G. Tonelli, A. Venturi, P. G. Verdini, S. Baccaro, L. Barone, A. Bartoloni, F. Cavallari, I. Dafinei, D. Del Re, E. Di Marco, M. Diemoz, D. Franci, E. Longo, G. Organtini, A. Palma, F. Pandolfi, R. Paramatti, F. Pellegrino, S. Rahatlou, C. Rovelli, G. Alampi, N. Amapane, R. Arcidiacono, S. Argiro, M. Arneodo, C. Biino, M. A. Borgia, C. Botta, N. Cartiglia, R. Castello, G. Cerminara, M. Costa, D. Dattola, G. Dellacasa, N. Demaria, G. Dughera, F. Dumitrache, A. Graziano, C. Mariotti, M. Marone, S. Maselli, E. Migliore, G. Mila, V. Monaco, M. Musich, M. Nervo, M. M. Obertino, S. Oggero, R. Panero, N. Pastrone, M. Pelliccioni, A. Romero, M. Ruspa, R. Sacchi, A. Solano, A. Staiano, P. P. Trapani, D. Trocino, A. V. Pereira, L. Visca, A. Zampieri, F. Ambroglini, S. Belforte, F. Cossutti, G. Della Ricca, B. Gobbo, A. Penzo, S. Chang, J. Chung, D. H. Kim, G. N. Kim, D. J. Kong, H. Park, D. C. Son, S. Y. Bahk, S. Song, S. Y. Jung, B. Hong, H. Kim, J. H. Kim, K. S. Lee, D. H. Moon, S. K. Park, H. B. Rhee, K. S. Sim, J. Kim, M. Choi, G. Hahn, I. C. Park, S. Choi, Y. Choi, J. Goh, H. Jeong, T. J. Kim, J. Lee, S. Lee, M. Janulis, D. Martisiute, P. Petrov, T. Sabonis, H. C. Valdez, A. S. Hernandez, S. C. Moreno, A. M. Pineda, P. Allfrey, R. N. C. Gray, D. Krofcheck, N. B. Rodrigues, P. H. Butler, T. Signal, J. C. Williams, M. Ahmad, I. Ahmed, W. Ahmed, M. I. Asghar, M. I. M. Awan, H. R. Hoorani, I. Hussain, W. A. Khan, T. Khurshid, S. Muhammad, S. Qazi, H. Shahzad, M. Cwiok, R. Dabrowski, W. Dominik, K. Doroba, M. Konecki, J. Krolikowski, K. Pozniak, R. Romaniuk, W. Zabolotny, P. Zych, T. Frueboes, R. Gokieli, L. Goscilo, M. Gorski, M. Kazana, K. Nawrocki, M. Szleper, G. Wrochna, P. Zalewski, N. Almeida, L. A. Pedro, P. Bargassa, A. David, P. Faccioli, P. G. F. Parracho, M. F. Ferreira, M. Gallinaro, M. G. Jordao, P. Martins, G. Mini, P. Musella, J. Pela, L. Raposo, P. Q. Ribeiro, S. Sampaio, J. Seixas, J. Silva, P. Silva, D. Soares, M. Sousa, J. Varela, H. K. Wohri, I. Altsybeev, I. Belotelov, P. Bunin, Y. Ershov, I. Filozova, M. Finger, A. Golunov, I. Golutvin, N. Gorbounov, V. Kalagin, A. Kamenev, V. Karjavin, V. Konoplyanikov, V.

Korenkov, G. Kozlov, A. Kurenkov, A. Lanev, A. Makankin, V. V. Mitsyn, P. Moisenz, E. Nikonov, D. Oleynik, V. Palichik, V. Perelygin, A. Petrosyan, R. Semenov, S. Shmatov, V. Smirnov, D. Smolin, E. Tikhonenko, S. Vasil'ev, A. Vishnevskiy, A. Volodko, A. Zarubin, V. Zhiltsov, N. Bondar, L. Chtchipounov, A. Denisov, Y. Gavrikov, G. Gavrilov, V. Golovtsov, Y. Ivanov, V. Kim, V. Kozlov, P. Levchenko, G. Obrant, E. Orishchin, A. Petrunin, Y. Shcheglov, A. Shchetkovskiy, V. Sknar, I. Smirnov, V. Sulimov, V. Tarakanov, L. Uvarov, S. Vavilov, G. Velichko, S. Volkov, A. Vorobyev, Y. Andreev, A. Anisimov, P. Antipov, A. Dermenev, S. Gninenko, N. Golubev, M. Kirsanov, N. Krasnikov, V. Matveev, A. Pashenkov, V. E. Postoev, A. Solovey, A. Toropin, S. Troitsky, A. Baud, V. Epshteyn, V. Gavrilov, N. Ilina, V. Kaftanov, V. Kolosov, M. Kossov, A. Krokhotin, S. Kuleshov, A. Oulianov, G. Safronov, S. Semenov, I. Shreyber, V. Stolin, E. Vlasov, A. Zhokin, E. Boos, M. Dubinin, L. Dudko, A. Ershov, A. Gribushin, V. Klyukhin, O. Kodolova, I. Lokhtin, S. Petrushanko, L. Sarycheva, V. Savrin, A. Snigirev, I. Vardanyan, I. Dremin, M. Kirakosyan, N. Konovalova, S. V. Rusakov, A. Vinogradov, S. Akimenko, A. Artamonov, I. Azhgirey, S. Bitioukov, V. Burtovoy, V. Grishin, V. Kachanov, D. Konstantinov, V. Krychkine, A. Levine, I. Lobov, V. Lukanin, Y. Mel'nik, V. Petrov, R. Ryutin, S. Slabospitsky, A. Sobol, A. Sytine, L. Tourtchanovitch, S. Troshin, N. Tyurin, A. Uzunian, A. Volkov, P. Adzic, M. Djordjevic, D. Jovanovic, D. Krpic, D. Maletic, J. Puzovic, N. Smiljkovic, M. Aguilar-Benitez, J. Alberdi, J. A. Maestre, P. Arce, J. M. Barcala, C. Battilana, C. B. Lazaro, J. C. Bejar, E. Calvo, M. C. Montes, M. Cepeda, M. Cerrada, M. C. Llatas, F. Clemente, N. Colino, M. Daniel, B. De La Cruz, A. D. Peris, C. D. Pardos, C. F. Bedoya, J. P. F. Ramos, A. Ferrando, J. Flix, M. C. Fouz, P. Garcia-Abia, A. C. Garcia-Bonilla, O. G. Lopez, S. G. Lopez, J. M. Hernandez, M. I. Josa, J. Marin, G. Merino, J. Molina, A. Molinero, J. J. Navarrete, J. C. Oller, J. P. Pelayo, L. Romero, J. Santaolalla, C. V. Munoz, C. Willmott, C. Yuste, C. Albajar, M. B. Otano, J. F. de Troconiz, A. G. Raboso, J. O. L. Berengueres, J. Cuevas, J. F. Menendez, I. G. Caballero, L. L. Iglesias, H. N. Sordo, J. M. V. Garcia, I. J. Cabrillo, A. Calderon, S. H. Chuang, I. D. Merino, C. D. Gonzalez, J. D. Campderros, M. Fernandez, G. Gomez, J. G. Sanchez, R. G. Suarez, C. Jorda, P. L. Pardo, A. L. Virto, J. Marco, R. Marco, C. M. Rivero, P. M. R. del Arbol, F. Matorras, T. Rodrigo, A. R. Jimeno, L. Scodellaro, M. S. Sanudo, I. Vila, R. V. Cortabitarte, D. Abbaneo, E. Albert, M. Alidra, S. Ashby, E. Auffray, J. Baechler, P. Baillon, A. H. Ball, S. L. Bally, D. Barney, F. Beaudette, R. Bellan, D. Benedetti, G. Benelli, C. Bernet, P. Bloch, S. Bolognesi, M. Bona, J. Bos, N. Bourgeois, T. Bourrel, H. Breuker, K. Bunkowski, D. Campi, T. Camporesi, E. Cano, A. Cattai, J. P. Chatelain, M. Chauvey, T. Christiansen, J. A. C. Perez, A. C. Garcia, R. Covarelli, B. Cure, A. De Roeck, V. Delachenal, D. Deyrail, S. Di Vincenzo, S. Dos Santos, T. Dupont, L. M. Edera, A. Elliott-Peisert, M. Eppard, M. Favre, N. Frank, W. Funk, A. Gaddi, M. Gastal, M. Gateau, H. Gerwig, D. Gigi, K. Gill, D. Giordano, J. P. Girod, F. Glege, R. G. R. Garrido, R. Goudard, S. Gowdy, R. Guida, L. Guiducci, J. Gutleber, M. Hansen, C. Hartl, J. Harvey, B. Hegner, H. F. Hoffmann, A. Holzner, A. Honma, M. Huhtinen, V. Innocente, P. Janot, G. Le Godec, P. Lecoq, C. Leonidopoulos, R.

Loos, C. Lourenco, A. Lyonnet, A. Macpherson, N. Magini, J. D. Maillefaud, G. Maire, T. Maki, L. Malgeri, M. Mannelli, L. Masetti, F. Meijers, P. Meridiani, S. Mersi, E. Meschi, A. M. Cordonnier, R. Moser, M. Mulders, J. Mulon, M. Noy, A. Oh, G. Olesen, A. Onnela, T. Orimoto, L. Orsini, G. Perinic, J. F. Pernot, P. Petagna, P. Petiot, A. Petrilli, A. Pfeiffer, M. Pierini, M. Pimia, R. Pintus, B. Pirollet, H. Postema, A. Racz, S. Ravat, S. B. Rew, J. R. Antunes, G. Rolandi, M. Rovere, V. Ryjov, H. Sakulin, D. Samyn, H. Sauce, C. Schafer, W. D. Schlatter, M. Schroder, C. Schwick, A. Sciaba, I. Segoni, N. Siegrist, P. Siegrist, N. Sinanis, T. Sobrier, P. Sphicas, D. Spiga, M. Spiropulu, F. Stockli, P. Traczyk, P. Tropea, J. Troska, A. Tsirou, L. Veillet, G. I. Veres, M. Voutilainen, P. Wertelaers, M. Zanetti, W. Bertl, K. Deiters, W. Erdmann, K. Gabathuler, R. Horisberger, Q. Ingram, H. C. Kaestli, S. Konig, D. Kotlinski, U. Langenegger, F. Meier, D. Renker, T. Rohe, J. Sibille, A. Starodumov, B. Betev, L. Caminada, Z. Chen, S. Cittolin, D. R. D. Di Calafiori, S. Dambach, G. Dissertori, M. Dittmar, C. Eggel, J. Eugster, G. Faber, K. Freudenreich, C. Grab, A. Herve, W. Hintz, P. Lecomte, P. D. Luckey, W. Lustermann, C. Marchica, P. Milenovic, F. Moortgat, A. Nardulli, F. Nessi-Tedaldi, L. Pape, F. Pauss, T. Punz, A. Rizzi, F. J. Ronga, L. Sala, A. K. Sanchez, M. C. Sawley, V. Sordini, B. Stieger, L. Tauscher, A. Thea, K. Theofilatos, D. Treille, P. Trub, M. Weber, L. Wehrli, J. Weng, S. Zelepoukine, C. Amsler, V. Chiochia, S. De Visscher, C. Regenfus, P. Robmann, T. Rommerskirchen, A. Schmidt, D. Tsirigkas, L. Wilke, Y. H. Chang, E. A. Chen, W. T. Chen, A. Go, C. M. Kuo, S. W. Li, W. Lin, P. Bartalini, P. Chang, Y. Chao, K. F. Chen, W. S. Hou, Y. Hsiung, Y. J. Lei, S. W. Lin, R. S. Lu, J. Schumann, J. G. Shiu, Y. M. Tzeng, K. Ueno, Y. Velikzhanin, C. C. Wang, M. Wang, A. Adiguzel, A. Ayhan, A. A. Gokce, M. N. Bakirci, S. Cerci, I. Dumanoglu, E. Eskut, S. Girgis, E. Gurpinar, I. Hos, T. Karaman, A. K. Topaksu, P. Kurt, G. Onengut, G. O. Gokbulut, K. Ozdemir, S. Ozturk, A. Polatoz, K. Sogut, B. Tali, H. Topakli, D. Uzun, L. N. Vergili, M. Vergili, I. V. Akin, T. Aliev, S. Bilmis, M. Deniz, H. Gamsizkan, A. M. Guler, K. Ocalan, M. Serin, R. Sever, U. E. Surat, M. Zeyrek, M. Deliomeroglu, D. Demir, E. Gulmez, A. Halu, B. Isildak, M. Kaya, O. Kaya, S. Ozkorucuklu, N. Sonmez, L. Levchuk, S. Lukyanenko, D. Soroka, S. Zub, F. Bostock, J. J. Brooke, T. L. Cheng, D. Cussans, R. Frazier, J. Goldstein, N. Grant, G. P. Heath, H. F. Heath, C. Hill, B. Huckvale, J. Jackson, C. K. Mackay, S. Metson, D. M. Newbold, K. Nirunpong, V. J. Smith, J. Velthuis, R. Walton, K. W. Bell, C. Brew, R. M. Brown, B. Camanzi, D. J. A. Cockerill, J. A. Coughlan, N. I. Geddes, K. Harder, S. Harper, B. W. Kennedy, P. Murray, C. H. Shepherd-Themistocleous, I. R. Tomalin, J. H. Williams, W. J. Womersley, S. D. Worm, R. Bainbridge, G. Ball, J. Ballin, R. Beuselinck, O. Buchmuller, D. Colling, N. Cripps, G. Davies, M. Della Negra, C. Foudas, J. Fulcher, D. Futyan, G. Hall, J. Hays, G. Iles, G. Karapostoli, B. C. MacEvoy, A. M. Magnan, J. Marrouche, J. Nash, A. Nikitenko, A. Papageorgiou, M. Pesaresi, K. Petridis, M. Pioppi, D. M. Raymond, N. Rompotis, A. Rose, M. J. Ryan, C. Seez, P. Sharp, G. Sidiropoulos, M. Stettler, M. Stoye, M. Takahashi, A. Tapper, C. Timlin, S. Tourneur, M. V. Acosta, T. Virdee, S. Wakefield, D. Wardrope, T. Whyntie, M. Wingham, J. E. Cole, I. Goitom, P. R. Hobson, A.

Khan, P. Kyberd, D. Leslie, C. Munro, I. D. Reid, C. Siamitros, R. Taylor, L. Teodorescu, I. Yaselli, T. Bose, M. Carleton, E. Hazen, A. H. Heering, A. Heister, J. St John, P. Lawson, D. Lazic, D. Osborne, J. Rohlf, L. Sulak, S. Wu, J. Andrea, A. Avetisyan, J. P. Chou, D. Cutts, S. Esen, G. Kukartsev, G. Landsberg, M. Narain, D. Nguyen, T. Speer, K. V. Tsang, R. Breedon, M. C. D. Sanchez, M. C. D. Cebra, M. Chertok, J. Conway, P. T. Cox, J. Dolen, R. Erbacher, E. Friis, W. Ko, A. Kopecky, R. Lander, A. Lister, H. Liu, S. Maruyama, T. Miceli, M. Nikolic, D. Pellett, J. Robles, M. Searle, J. Smith, M. Squires, J. Stilley, M. Tripathi, R. V. Sierra, C. Veelken, V. Andreev, K. Arisaka, D. Cline, R. Cousins, S. Erhan, J. Hauser, M. Ignatenko, C. Jarvis, J. Mumford, C. Plager, G. Rakness, P. Schlein, J. Tucker, V. Valuev, R. Wallny, X. Yang, J. Babb, M. Bose, A. Chandra, R. Clare, J. A. Ellison, J. W. Gary, G. Hanson, G. Y. Jeng, S. C. Kao, F. Liu, A. Luthra, H. Nguyen, G. Pasztor, A. Satpathy, B. C. Shen, R. Stringer, J. Sturdy, V. Sytnik, R. Wilken, S. Wimpenny, J. G. Branson, E. Dusinberre, D. Evans, F. Golf, R. Kelley, M. Lebourgeois, J. Letts, E. Lipeles, B. Mangano, J. Muelmenstaedt, M. Norman, S. Padhi, A. Petrucci, H. Pi, M. Pieri, R. Ranieri, M. Sani, V. Sharma, S. Simon, F. W. Urthwein, A. Yagil, C. Campagnari, M. D'Alfonso, T. Danielson, J. Garberson, J. Incandela, C. Justus, P. Kalavase, S. A. Koay, D. Kovalskyi, V. Krutelyov, J. Lamb, S. Lowette, V. Pavlunin, F. Rebassoo, J. Ribnik, J. Richman, R. Rossin, D. Stuart, W. To, J. R. Vlimant, M. Witherell, A. Apresyan, A. Bornheim, J. Bunn, M. Chiorboli, M. Gataullin, D. Kcira, V. Litvine, Y. Ma, H. B. Newman, C. Rogan, V. Timciuc, J. Veverka, R. Wilkinson, Y. Yang, L. Zhang, K. Zhu, R. Y. Zhu, B. Akgun, R. Carroll, T. Ferguson, D. W. Jang, S. Y. Jun, M. Paulini, J. Russ, N. Terentyev, H. Vogel, I. Vorobiev, J. P. Cumalat, M. E. Dinardo, B. R. Drell, W. T. Ford, B. Heyburn, E. L. Lopez, U. Nauenberg, K. Stenson, K. Ulmer, S. R. Wagner, S. L. Zang, L. Agostino, J. Alexander, F. Blekman, D. Cassel, A. Chatterjee, S. Das, L. K. Gibbons, B. Heltsley, W. Hopkins, A. Khukhunaishvili, B. Kreis, V. Kuznetsov, J. R. Patterson, D. Puigh, A. Ryd, X. Shi, S. Stroiney, W. Sun, W. D. Teo, J. Thom, J. Vaughan, Y. Weng, P. Wittich, C. P. Beetz, G. Cirino, C. Sanzeni, D. Winn, S. Abdullin, M. A. Afaq, M. Albrow, B. Ananthan, G. Apollinari, M. Atac, W. Badgett, L. Bagby, J. A. Bakken, B. Baldin, K. Banicz, L. A. T. Bauerdick, A. Beretvas, J. Berryhill, P. C. Bhat, K. Biery, M. Binkley, I. Bloch, F. Borcherding, A. M. Brett, K. Burkett, J. N. Butler, V. Chetluru, H. W. K. Cheung, F. Chlebana, I. Churin, S. Cihangir, M. Crawford, W. Dagenhart, M. Demarteau, G. Derylo, D. Dykstra, D. P. Eartly, J. E. Elias, V. D. Elvira, L. Feng, M. Fischler, I. Fisk, S. Foulkes, J. Freeman, P. Gartung, E. Gottschalk, T. Grassi, D. Green, Y. Guo, O. Gutsche, A. Hahn, J. Hanlon, R. M. Harris, B. Holzman, J. Howell, D. Hufnagel, E. James, H. Jensen, M. Johnson, C. D. Jones, U. Joshi, E. Juska, J. Kaiser, B. Klima, S. Kossiakov, K. Kousouris, S. Kwan, C. M. Lei, P. Limon, J. A. L. Perez, S. Los, L. Lueking, G. Lukhanin, S. Lusin, J. Lykken, K. Maeshima, J. M. Marraffino, D. Mason, P. McBride, T. Miao, K. Mishra, S. Moccia, R. Mommsen, S. Mrenna, A. S. Muhammad, C. Newman-Holmes, C. Noeding, V. O'Dell, O. Prokofyev, R. Rivera, C. H. Rivetta, A. Ronzhin, P. Rossman, S. Ryu, V. Sekhri, E. Sexton-Kennedy, I. Sfiligoi, S. Sharma, T. M. Shaw, D. Sh-

pakov, E. Skup, R. P. Smith, A. Soha, W. J. Spalding, L. Spiegel, I. Suzuki, P. Tan, W. Tanenbaum, S. Tkaczyk, R. Trentadue, L. Uplegger, E. W. Vaandering, R. Vidal, J. Whitmore, E. Wicklund, W. Wu, J. Yarba, F. Yumiceva, J. C. Yun, D. Acosta, P. Avery, V. Barashko, D. Bourilkov, M. Chen, G. P. Di Giovanni, D. Dobur, A. Drozdetskiy, R. D. Field, Y. Fu, I. K. Furic, J. Gartner, D. Holmes, B. Kim, S. Klimenko, J. Konigsberg, A. Korytov, K. Kotov, A. Kropivnitskaya, T. Kypreos, A. Madorsky, K. Matchev, G. Mitselmakher, Y. Pakhotin, J. P. Gomez, C. Prescott, V. Rapsevicius, R. Remington, M. Schmitt, B. Scurlock, D. Wang, J. Yelton, C. Ceron, V. Gaultney, L. Kramer, L. M. Lebolo, S. Linn, P. Markowitz, G. Martinez, J. L. Rodriguez, T. Adams, A. Askew, H. Baer, M. Bertoldi, J. Chen, W. G. D. Dharmaratna, S. V. Gleyzer, J. Haas, S. Hagopian, V. Hagopian, M. Jenkins, K. F. Johnson, E. Prettner, H. Prosper, S. Sekmen, M. M. Baarmand, S. Guragain, M. Hohlmann, H. Kalakhety, H. Mermerkaya, R. Ralich, I. Vodopiyanov, B. Abelev, M. R. Adams, I. M. Anghel, L. Apanasevich, V. E. Bazterra, R. R. Betts, J. Callner, M. A. Castro, R. Cavanaugh, C. Dragoiu, E. J. Garcia-Solis, C. E. Gerber, D. J. Hofman, S. Khalatian, C. Mironov, E. Shabalina, A. Smoron, N. Varelas, U. Akgun, E. A. Albayrak, A. S. Ayan, B. Bilki, R. Briggs, K. Cankocak, K. Chung, W. Clarida, P. Debbins, F. Duru, F. D. Ingram, C. K. Lae, E. McCliment, J. P. Merlo, A. Mestvirishvili, M. J. Miller, A. Moeller, J. Nachtman, C. R. Newsom, E. Norbeck, J. Olson, Y. Onel, F. Ozok, J. Parsons, I. Schmidt, S. Sen, J. Wetzel, T. Yetkin, K. Yi, B. A. Barnett, B. Blumenfeld, A. Bonato, C. Y. Chien, D. Fehling, G. Giurgiu, A. V. Gritsan, Z. J. Guo, P. Maksimovic, S. Rappoccio, M. Swartz, N. V. Tran, Y. Zhang, P. Baringer, A. Bean, O. Grachov, M. Murray, V. Radicci, S. Sanders, J. S. Wood, V. Zhukova, D. Bandurin, T. Bolton, K. Kaadze, A. Liu, Y. Maravin, D. Onoprienko, I. Svintradze, Z. Wan, J. Gronberg, J. Hollar, D. Lange, D. Wright, D. Baden, R. Bard, M. Boutemeur, S. C. Eno, D. Ferencek, N. J. Hadley, R. G. Kellogg, M. Kirn, S. Kunori, K. Rossato, P. Rumerio, F. Santanastasio, A. Skuja, J. Temple, M. B. Tonjes, S. C. Tonwar, T. Toole, E. Twedt, B. Alver, G. Bauer, J. Bendavid, W. Busza, E. Butz, I. A. Cali, M. Chan, D. D'Enterria, P. Everaerts, G. G. Ceballos, K. A. Hahn, P. Harris, S. Jaditz, Y. Kim, M. Klute, Y. J. Lee, W. Li, C. Loizides, T. Ma, M. Miller, S. Nahn, C. Paus, C. Roland, G. Roland, M. Rudolph, G. Stephans, K. Sumorok, K. Sung, S. Vaurynovich, E. A. Wenger, B. Wyslouch, S. Xie, Y. Yilmaz, A. S. Yoon, D. Bailleux, S. I. Cooper, P. Cushman, B. Dahmes, A. De Benedetti, A. Dolgopolov, P. R. Dudero, R. Egeland, G. Franzoni, J. Haupt, A. Inyakin, K. Klapoetke, Y. Kubota, J. Mans, N. Mirman, D. Petyt, V. Rekovic, R. Rusack, M. Schroeder, A. Singovsky, J. Zhang, L. M. Cremaldi, R. Godang, R. Kroeger, L. Perera, R. Rahmat, D. A. Sanders, P. Sonnek, D. Summers, K. Bloom, B. Bockelman, S. Bose, J. Butt, D. R. Claes, A. Dominguez, M. Eads, J. Keller, T. Kelly, I. Kravchenko, J. Lazo-Flores, C. Lundstedt, H. Malbouisson, S. Malik, G. R. Snow, U. Baur, I. Iashvili, A. Kharchilava, K. Smith, M. Strang, G. Alverson, E. Barberis, O. Boeriu, G. Eulisse, G. Govi, T. McCauley, Y. Musienko, S. Muzaffar, I. Osborne, T. Paul, S. Reucroft, J. Swain, L. Taylor, L. Tuura, A. Anastassov, B. Gobbi, A. Kubik, R. A. Ofierzynski, A. Pozdnyakov, S. Stoynev, M. Velasco, S. Won, L. Antonelli, D. Berry, M. Hildreth, C. Jessop, D. J. Kar-

mgard, T. Kolberg, K. Lannon, S. Lynch, N. Marinelli, D. M. Morse, R. Ruchti, J. Slaunwhite, J. Warchol, M. Wayne, B. Bylsma, L. S. Durkin, J. Gilmore, J. Gu, P. Killewald, T. Y. Ling, G. Williams, N. Adam, E. Berry, P. Elmer, A. Garmash, D. Gerbaudo, V. Halyo, A. Hunt, J. Jones, E. Laird, D. Marlow, T. Medvedeva, M. Mooney, J. Olsen, P. Piroue, D. Stickland, C. Tully, J. S. Werner, T. Wildish, Z. Xie, A. Zuranski, J. G. Acosta, M. B. Del Alamo, X. T. Huang, A. Lopez, H. Mendez, S. Oliveros, J. E. R. Vargas, N. Santacruz, A. Zatzerklyany, E. Alagoz, E. Antillon, V. E. Barnes, G. Bolla, D. Bortoletto, A. Everett, A. F. Garfinkel, Z. Gecse, L. Gutay, N. Ippolito, M. Jones, O. Koybasi, A. T. Laasanen, N. Leonardo, C. Liu, V. Maroussov, P. Merkel, D. H. Miller, N. Neumeister, A. Sedov, I. Shipsey, H. D. Yoo, Y. Zheng, P. Jindal, N. Parashar, V. Cuplov, K. M. Ecklund, F. J. M. Geurts, J. H. Liu, D. Maronde, M. Matveev, B. P. Padley, R. Redjimi, J. Roberts, L. Sabbatini, A. Tumanov, B. Betchart, A. Bodek, H. Budd, Y. S. Chung, P. de Barbaro, R. Demina, H. Flacher, Y. Gotra, A. Harel, S. Korjenevski, D. C. Miner, D. Orbaker, G. Petrillo, D. Vishnevskiy, M. Zielinski, A. Bhatti, L. Demortier, K. Goulianos, K. Hatakeyama, G. Lungu, C. Mesropian, M. Yan, O. Atramentov, E. Bartz, Y. Gershtein, E. Halkiadakis, D. Hits, A. Lath, K. Rose, S. Schnetzer, S. Somalwar, R. Stone, S. Thomas, T. L. Watts, G. Cerizza, M. Hollingsworth, S. Spanier, Z. C. Yang, A. York, J. Asaadi, A. Aurisano, R. Eusebi, A. Golyash, A. Gurrola, T. Kamon, C. N. Nguyen, J. Pivarski, A. Safonov, S. Sengupta, D. Toback, M. Weinberger, N. Akchurin, L. Berntzon, K. Gumus, C. Jeong, S. W. Lee, S. Popescu, Y. Roh, A. Sill, I. Volobouev, E. Washington, R. Wigmans, E. Yazgan, D. Engh, C. Florez, W. Johns, S. Pathak, P. Sheldon, D. Andelin, M. W. Arenton, M. Balazs, S. Boutle, M. Buehler, S. Conetti, B. Cox, R. Hirosky, A. Ledovskoy, C. Neu, D. Phillips, M. Ronquest, R. Yohay, S. Gollapinni, K. Gunthoti, R. Harr, P. E. Karchin, M. Mattson, A. Sakharov, M. Anderson, M. Bachtis, J. N. Bellinger, D. Carlsmith, I. Crotty, S. Dasu, S. Dutta, J. Efron, F. Feyzi, K. Flood, L. Gray, K. S. Grogg, M. Grothe, R. Hall-Wilton, M. Jaworski, P. Klabbers, J. Klukas, A. Lanaro, C. Lazaridis, J. Leonard, R. Loveless, M. M. de Abril, A. Mohapatra, G. Ott, G. Polese, D. Reeder, A. Savin, W. H. Smith, A. Sourkov, J. Swanson, M. Weinberg, D. Wenman, M. Wensveen, and A. White

This paper is posted at Purdue e-Pubs.
http://docs.lib.purdue.edu/physics_articles/1208

IOPscience iopscience.iop.org

Home Search Collections Journals About Contact us My IOPscience

# Commissioning of the CMS High-Level Trigger with cosmic rays

This article has been downloaded from IOPscience. Please scroll down to see the full text article.

2010 JINST 5 T03005

(http://iopscience.iop.org/1748-0221/5/03/T03005)

View the table of contents for this issue, or go to the journal homepage for more

Download details:
IP Address: 128.211.161.17
The article was downloaded on 21/04/2011 at 18:09

Please note that terms and conditions apply.

PUBLISHED BY IOP PUBLISHING FOR SISSA

RECEIVED: *November 26, 2009*
REVISED: *January 19, 2010*
ACCEPTED: *February 1, 2010*
PUBLISHED: *March 19, 2010*

**COMMISSIONING OF THE CMS EXPERIMENT WITH COSMIC RAYS**

# Commissioning of the CMS High-Level Trigger with cosmic rays

**CMS Collaboration**

ABSTRACT: The CMS High-Level Trigger (HLT) is responsible for ensuring that data samples with potentially interesting events are recorded with high efficiency and good quality. This paper gives an overview of the HLT and focuses on its commissioning using cosmic rays. The selection of triggers that were deployed is presented and the online grouping of triggered events into streams and primary datasets is discussed. Tools for online and offline data quality monitoring for the HLT are described, and the operational performance of the muon HLT algorithms is reviewed. The average time taken for the HLT selection and its dependence on detector and operating conditions are presented. The HLT performed reliably and helped provide a large dataset. This dataset has proven to be invaluable for understanding the performance of the trigger and the CMS experiment as a whole.

KEYWORDS: Trigger concepts and systems (hardware and software); Online farms and online filtering

ARXIV EPRINT: 0911.4889

© 2010 IOP Publishing Ltd and SISSA

doi:10.1088/1748-0221/5/03/T03005

2010 JINST 5 T03005

## Contents


**1 Introduction** **1**

**2 The CMS detector and its trigger system** **2**

**3 HLT during CRAFT** **4**
3.1 CRAFT triggers 4
3.2 Online deployment of the HLT menu 6

**4 Streams and primary datasets** **7**
4.1 DQM stream 8
4.2 AlCaRaw streams 8

**5 Monitoring of the HLT performance during CRAFT** **9**
5.1 Online DQM 9
5.1.1 DQM in the high-level trigger 10
5.1.2 Quasi-online DQM 10
5.1.3 Monitoring the performance of the muon HLT 10
5.2 Offline low-latency high-statistics data quality monitoring 11
5.2.1 Software 12
5.2.2 Usage for CRAFT 12
5.3 Monitoring of the CPU performance 12

**6 Summary and conclusions** **14**

**The CMS collaboration** **17**


## 1 Introduction

The Compact Muon Solenoid (CMS) detector [1] is one of two large general-purpose experiments at the CERN Large Hadron Collider (LHC) [2]. The 12,500 ton detector features nearly complete solid-angle coverage and can precisely measure electrons, photons, muons, jets and missing energy over a large range of particle energies. These broad capabilities of the CMS detector will allow the exploration of electroweak symmetry breaking and enable the potential discovery of physics beyond the Standard Model [3].

The CMS trigger and data acquisition systems are responsible for ensuring that data samples with potentially interesting events are recorded with high efficiency and good quality. The experiment has a two-level trigger system, unlike most other hadron collider experiments which have more traditional three-level systems. The first level is hardware-based and is called the



2010 JINST 5 T03005

"Level-1 Trigger" (L1) while the second level is software-based and is called the "High-Level Trigger" (HLT).

In late 2008 the CMS Collaboration conducted a month-long data taking exercise known as the Cosmic Run At Four Tesla (CRAFT) with the goal of commissioning the experiment for extended operation [4]. With all installed detector systems participating, CMS recorded 270 million cosmic ray triggered events with the solenoid at its nominal axial field strength of 3.8 T. In addition to commissioning the experiment operationally, the data collected during CRAFT proved invaluable for understanding the performance of the CMS experiment as a whole.

This paper reviews the implementation of the CMS HLT and its commissioning using CRAFT data. For the first time, during CRAFT, the CMS HLT was run over an extended period of time utilizing data from most sub-detectors. In addition to the gain in operational experience, the data collected proved to be extremely useful for developing monitoring strategies and procedures. In particular, since the physics data were primarily comprised of muons, muon-based HLT algorithms benefited most.

The paper is organized as follows. The CMS Trigger system is described in section 2 and an overview of the triggers deployed online during cosmic ray data taking is provided in section 3. The output of the HLT is reviewed in section 4 while the strategies implemented and commissioned for monitoring the performance of the HLT are discussed in detail in section 5.

## 2 The CMS detector and its trigger system

The central feature of the Compact Muon Solenoid (CMS) apparatus is a superconducting solenoid, of 6 m internal diameter, providing a field of 3.8 T. Within the field volume are the silicon pixel and strip tracker, the crystal electromagnetic calorimeter (ECAL) and the brass/scintillator hadron calorimeter (HCAL). Muons are measured in the pseudorapidity window $|\eta| < 2.4$, with detection planes made of three technologies: Drift Tubes (DT), Cathode Strip Chambers (CSC), and Resistive Plate Chambers (RPC). In addition to the barrel and endcap detectors, CMS has extensive forward calorimetry (HF).

A schematic view of the CMS trigger system is presented in figure 1. The details of the trigger design and its implementation can be found in refs. [5–7]. L1 is designed to process information from the CMS detector at a bunch-crossing rate of 40 MHz. This rate, coupled with the latency of $3\,\mu$s, limits the data accessible for processing to the information from the calorimeter and muon detectors. Additionally, in order to allow fast processing, these data have coarser granularity and lower resolution than the full information from the front-end electronics. The L1 trigger is built mostly of custom hardware and is designed to reduce the event rate to 100 kHz at the LHC design luminosity $\mathscr{L} = 10^{34}\,\mathrm{cm}^{-2}\,\mathrm{s}^{-1}$.

The CMS HLT hardware consists of a single processor farm called the "Event Filter Farm". The farm comprises PCs mounting 2.66 GHz dual quad-core Intel processors and a total of 16 GB RAM. The HLT algorithms that run on the farm are required to reduce the event rate to $O(100)$ Hz. In traditional three-level trigger systems this rate reduction of $O(1000)$ is achieved in two stages: a customized hardware or software-based Level-2 trigger that quickly provides the large rejection factor and a Level-3 processor farm that makes decisions based on more sophisticated algorithms. The CMS HLT, in contrast, combines the rejection power and speed of a Level-2 trigger with the



2010 JINST 5 T03005

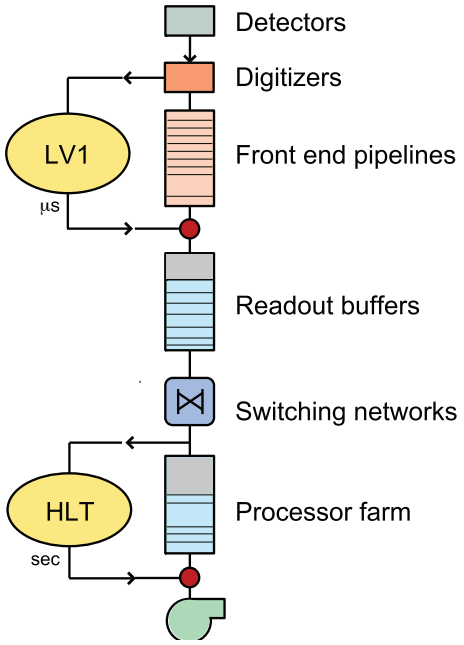


**Figure 1**. Schematic view of the CMS trigger system.

flexibility and sophistication of Level-3 in a single processor farm. The design of the filter farm is described in detail in ref. [8].

Traditional three-level systems have to use "regional" information from specific parts of the detector to achieve the $O(1000)$ rejection. Instead, in the CMS two-level design, full-granularity data from the whole detector (including the tracker) are available to a standard commercial computer. Regional data-unpacking is implemented only for some of the sub-detectors to optimize the CPU performance of the HLT. The CMS HLT decision can then be based on full resolution data, and the filtering algorithms have the flexibility to use sophisticated offline-quality reconstruction algorithms. Due to the high input rate of 100 kHz which the filter farm needs to sustain, this implementation requires significant CPU resources. Therefore, the reconstruction algorithms that run during the HLT processing must be optimized for performance in order to minimize dead-time and, at the same time, collect all interesting events for physics analysis.

The data acquisition (DAQ) system commissioned during CRAFT consisted of a total of 275 builder units that assembled the data fragments into complete events, and 825 filter units for the HLT processing. Towards the end of CRAFT, a DAQ configuration of 720 8-core PCs and nearly 4500 filter units was successfully tested. This DAQ configuration is planned to be used at LHC startup. With such a configuration, the CPU power available in the filter farm is expected to be suitable for handling HLT input rates as high as 50 kHz for an average processing time of up to $\approx$100 ms/event. This estimate includes a conservative factor of two in the average HLT processing time which has been measured to be $\approx$43 ms using fully simulated events [7]. For LHC operation at high luminosity, the computing power of the filter farm is expected to double in size, with the use of more recent CPUs, thereby meeting the design HLT input rate of $\sim$ 100 kHz.



2010 JINST 5 T03005

## 3 HLT during CRAFT

Candidate HLT "menus" for startup were commissioned during CRAFT and their performance was studied. A menu is defined as a set of triggers, each of which consists of several reconstruction and filtering modules. An event is stored to permanent storage if it is selected by at least one High-Level trigger in the deployed menus.

The HLT menus deployed during CRAFT were designed to reliably deliver data from cosmic rays, regardless of detector conditions. Consequently, these menus were primarily composed of "L1 pass-through" triggers, which transfer to storage the events accepted by one or more L1 triggers without additional processing or selection. Triggers with additional selection beyond the L1 decision were added to the HLT menus throughout the commissioning period. In subsequent studies of the recorded data, these triggers were useful for physics selection, detector diagnostics, and the alignment and calibration of the CMS subsystems.

Prior to CRAFT, HLT algorithms had been studied using Monte Carlo simulated data. The introduction of these algorithms to the HLT menus during CRAFT provided an opportunity to test their behavior in the detector environment and improve the selection criteria.

### 3.1 CRAFT triggers

Every event processed by the HLT must first satisfy one or more of the L1 trigger requirements. The L1 Global Trigger (GT) [9] can provide up to 128 trigger algorithms that select an event, based on logical combinations of L1 trigger objects (such as muons, jets, or calorimeter transverse energy) with applied selection criteria (energy/momentum thresholds, etc.). Up to 64 simple on/off signals from the sub-detectors, or "Technical triggers", can also be added to the GT decision. The technical triggers provide additional information that may be used for special purposes such as detector diagnostics and monitoring. During CRAFT, only the most inclusive L1 single-object trigger algorithms contributed to the global L1 decision: a muon (with no additional selection), a jet with transverse energy above 10 GeV, or an electron or photon with at least 1 GeV of transverse energy. The results of the remaining L1 trigger algorithms were computed but were not considered in the GT decision, i.e., masked. The full L1 results (including these masked triggers) were available to the HLT, thus allowing the more complex HLT triggers to be seeded by more restrictive L1 trigger algorithms.

The HLT menus deployed during CRAFT included triggers that can be grouped into two main categories: L1 pass-through triggers, and triggers that required some additional processing beyond the L1 decision. All HLT triggers were run over all events accepted at L1.

For most L1 pass-through triggers, the HLT only checked the event type as marked by the GT. The HLT accepted events if any of the following L1 conditions was satisfied:

- The event was marked as a "physics" event by the GT. This required a positive response from any of the trigger algorithms or technical triggers that contributed to the GT decision. This ensured that all events accepted at L1 were kept for later study. These events occurred at a rate of $\sim 500$ Hz.

- The event was marked as a "calibration" event. These specially triggered events occur at the end of about 1% of all LHC orbits during the $3\,\mu$s gap that is devoid of protons in both LHC beams [10]. This orbit gap was emulated by CMS during CRAFT. All L1 "physics" triggers



2010 JINST 5 T03005

(algorithms or technical triggers) are suppressed during a calibration event. These events occur at a rate of 100 Hz and are used for detector calibration and diagnostics.

- The event was marked by the GT as a "random" trigger event. These events are sent to the HLT in order to verify the L1 decision. The random trigger rate was limited to a few Hz by the HLT.

Three HLT pass-through triggers were implemented, one for each of the above conditions. The other HLT triggers included in the CRAFT menus selected sub-samples of the data already accepted by these triggers. This allowed the data to be organized into more manageable blocks (see section 4).

In addition to the L1 pass-through triggers described above, several more complicated triggers were included in the HLT menus to help with detector diagnostics:

- A trigger, seeded by random L1 triggers, accepted events based on the size of the pixel tracker data. This sub-detector has a very low noise rate, such that charged particles passing through the tracker noticeably increase the pixel data volume. This trigger could be used to validate the L1 decision, since such an event, with particles crossing the pixel tracker, could be accepted by the HLT even if it was not flagged as "physics" by the GT.

- Similarly, a trigger was designed to accept events with energy deposition in HF exceeding the noise threshold.

- During dedicated runs designed to monitor HCAL noise behavior, the L1 trigger system was configured to accept events consistent with noise from HCAL photodiodes. HLT CRAFT menus included a pass-through trigger to accept these events.

In order to commission the HLT reconstruction algorithms in preparation for collisions, physics triggers that applied additional selection criteria, beyond the L1 seed requirement, were also included in the HLT menu. These triggers include selection algorithms that will be used to filter collision data, but with relaxed criteria (energy/momentum thresholds, etc.) in order to collect cosmic ray and detector noise data.

- For events accepted by the GT with a L1 jet algorithm, the calorimeter data in the vicinity of the L1 jet were used to reconstruct jet candidates in the HLT using the CMS implementation of the Iterative Cone algorithm [11]. The HLT jet transverse energy was required to exceed 12 GeV.

- Events that triggered the L1 jet algorithms were accepted by the HLT without additional selection criteria. These events, collected without beam passing through CMS, will be used for detector background studies, relevant for example for heavy stable charged particle searches in collision data [12].

- For events with an electron/photon L1 seed, the ECAL regions surrounding the L1 seed were examined and an electromagnetic object was reconstructed using calorimeter information only. The event was accepted by the HLT if the electron/photon HLT object had at least 5 GeV of transverse energy. Information from the tracker was ignored.



2010 JINST 5 T03005

- Several muon triggers were included in the CRAFT menus:
  - ⋆ The muon detector data were examined and the muon was reconstructed from the L1 muon seed using this information. Muons with at least 3 GeV/c of transverse momentum ($p_T$) were accepted.
  - ⋆ Starting with the L1 seed in the muon detector, the path of the reconstructed muon was extrapolated inward to the tracker volume. Information from the reconstructed particle trajectory within the tracker was used to improve the estimation of the muon momentum. Events with muons with $p_T > 3$ GeV/c were accepted.
  - ⋆ Alternatively, tracks were reconstructed in the tracker volume without seeding from a L1 muon object. Events accepted by this trigger, which examined any event accepted by L1, provided a source of cosmic rays intersecting the tracker volume that may have been missed by the standard HLT muon selection and can be used to improve the HLT reconstruction algorithms. This trigger could only be implemented during commissioning when the HLT input rate is low compared to the pp collision rate. In order to process the large number of events expected from L1 during colliding beam operations, any trigger that implements some non-trivial selection criteria in the HLT must first refine the input using L1 seed information.

Finally, triggers were included in the HLT menus to satisfy the alignment and calibration needs of the CMS experiment. The performance of these triggers will be discussed in section 5.

### 3.2 Online deployment of the HLT menu

The menu that is deployed *online* for data taking operations closely resembles the *offline*-tested menu. The HLT uses the same software to run offline on Monte Carlo simulations and previously collected events and to record online collision or cosmic ray data. However, a small set of technical adjustments is necessary when the menu is moved from the offline computing environment to the Event Filter Farm. These adjustments can potentially introduce a mismatch between what is tested offline and what is used online.

The HLT menu is tested on a dedicated section of the Event Filter Farm prior to online deployment. This validation farm emulates the behavior of the full Event Filter Farm and is used to validate the HLT menu on previously collected data samples. The validation farm comprises a Storage Manager (SM) application and an adjustable number of filter units, up to 19, each running up to four independent event processing threads. The SM is the last component in the data-handling chain and performs two primary functions. The first function is to collect events from each Filter Farm HLT process, and store them in files for subsequent transfer and processing. The data files are assigned to one or more output streams (see section 4) according to the defined trigger bits and the SM configuration information. The second function of the SM is to act as an event server for calibration and monitoring purposes.

A sample of previously collected data events is examined using the validation farm, the events being filtered by the trigger menu under consideration. This procedure validates several aspects of the trigger menu which cannot be otherwise tested offline:



2010 JINST 5 T03005

- the trigger menu behavior, when first deployed on the Event Filter Farm. Due to the differences in the online and offline environments, it is possible that an offline-validated menu is incompatible with the online environment;
- the selection of events by the menu, and whether rates are consistent with expectations from offline tests;
- the correct grouping of data into streams, each containing the specified set of "primary datasets" (see section 4);
- the communication with the Storage Manager and the production of the appropriate output file for each stream.

The online test also provides a useful opportunity for debugging the candidate HLT menu. The Event Filter Farm places problematic events, such as events with corrupt data or reconstruction problems resulting in the failure of the HLT filtering process, into a special "Error" stream. The content of this stream is analyzed offline in order to diagnose problems and to serve as a test for new trigger algorithms.

During CRAFT operation, a menu was first validated with data on the validation farm and then deployed online. The performance of the menu was then monitored as discussed in section 5.1.

A total of 14 HLT menus were deployed during the CRAFT data taking period. In most cases, new menus were created by making small adjustments to the existing menu. These changes were prompted by the daily operational goals and could be validated and implemented within an hour. By contrast, the HLT menus that included triggers designed to test HLT reconstruction algorithms were validated over several days to ensure that they could be deployed online without problems.

## 4 Streams and primary datasets

As described in section 3.2, the SM is responsible for collecting events from each Filter Farm HLT process and storing them in files for subsequent transfer and processing. Events are grouped into a set of streams, with distinct sets of data files produced for each stream. The grouping of events is done according to their offline usage. As an example, the primary stream is "Stream A", or the "physics" stream, which consists of events which satisfy the needs of most offline physics analyses. Other streams serve special purposes such as monitoring the performance of the HLT algorithms.

Different streams must be defined for samples that require special or reduced amount of information ("event content"). This is necessary since the software framework requires both online and offline data files to contain homogeneous information. For example, the event content used for the physics stream comprises the full detector and trigger raw data, and the L1 and HLT trigger results. However, streams used for calibration can benefit from storing only a fraction of the raw data, while using triggers with higher accept rates than those included in the physics stream. This allows the highest possible collection rate for calibration events while respecting bandwidth constraints.

The streams that were defined in the HLT configuration and exercised during CRAFT are listed below:

- Stream A: The primary physics stream, which consists of detector and trigger raw data and L1 and HLT trigger summary results. The full list of physics triggers feeds this stream.



2010 JINST 5 T03005

- DQM: Used to monitor the performance of the detector, the L1 trigger and the HLT algorithms. All relevant by-products of the HLT reconstruction are stored in order to allow detailed online and offline validation. These reconstruction by-products are objects created by the HLT processing, contain detailed information regarding the execution of the algorithms, and can double the size of the data stream for certain types of events. These by-products are not stored in the Stream A output.

- Calibration: Used to collect "calibration" type L1-triggered events during the orbit gaps (see section 3.1). The calibration stream provides events for monitoring and calibrating the various sub-detectors.

- AlCaRaw: A group of streams used to collect data for calibrating the ECAL and HCAL detectors. Typically, these streams are fed by high rate triggers which have reduced event content. During collisions, these data will be used for providing new calibration and alignment constants for use by offline reconstruction algorithms.The AlCaRaw streams are described in more detail in section 4.2.

During CRAFT, a total of seven streams (Stream A, DQM, Calibration, and 4 AlCaRaw streams) were produced. Upon transfer to the CERN "Tier-0" computing site, the data corresponding to the various streams was reformatted and split into various "Primary Datasets". These datasets are defined, within a stream, by grouping a set of triggers that perform similar selections (e.g., all muon-based triggers within Stream A were grouped into the "Cosmics" dataset). The primary datasets are intended to provide small-sized samples suitable for specific physics analyses.

The definition of multiple streams and primary datasets during CRAFT and their subsequent offline processing helped in the commissioning of the full workflow that will be used at LHC startup.

### 4.1 DQM stream

To perform data quality monitoring (DQM), a special stream was used during CRAFT. This stream contained the same triggers as the primary physics stream, Stream A, with two main differences. The DQM stream included events selected by the calibration triggers, which were part of the calibration stream. This allowed the DQM team to check and monitor the quality of the data used for calibration purposes. In addition, the stream included the HLT reconstruction by-products. These by-products are essential for monitoring the proper performance of the HLT algorithms and can be effectively used for debugging purposes.

The DQM stream is required to provide sufficient data for online DQM (see section 5.1). The rate of the stream is determined mainly by the time taken to reformat the data before it is fed to the DQM applications. During CRAFT the rate of the stream was 25 Hz, but for the final operation during collision data taking, a rate of about 60 Hz or higher is expected.

### 4.2 AlCaRaw streams

The term "AlCaRaw" is used to designate high-rate triggers that provide events for detector alignment and calibration. The name consists of two parts: "AlCa" indicates that the events are used for alignment and calibration, and "Raw" indicates that the events are selected directly at the raw data level.



2010 JINST 5 T03005

Alignment and calibration techniques typically require large size samples. However, only a small portion of the event data is used, i.e., the full event is not needed for most alignment and calibration purposes. Usually, minimum bias events serve this purpose best. These have high rates and hence directly compete with the triggers needed for physics analyses. In order to collect the statistics required for alignment and calibration, without saturating the data taking bandwidth, dedicated triggers record events and carry out data reduction so as to store the minimal amount of information needed for the calibration or alignment processes. Data collected by these triggers are used for the calibration of the ECAL and HCAL sub-detectors.

Four AlCaRaw streams were exercised during CRAFT:

- ECAL $\pi^0$: uses a constraint on the invariant mass formed from two photons to compute inter-calibration coefficients for the electromagnetic calorimeter. The selection of $\pi^0$ candidates is based on two isolated photon candidates where the invariant mass of the two photons is close to the $\pi^0$ mass. The output of the AlCaRaw trigger contains only the reconstructed hits forming the $\pi^0$ candidates. The typical event size is around 1.5 kB which corresponds to about one percent of the full event size.

- ECAL $\phi$ symmetry: relies on the azimuthal ($\phi$) invariance of the energy deposition in physics events. This trigger records all reconstructed hits in the event. The typical event size is around 5 kB.

- HCAL $\phi$ symmetry: relies on the $\phi$ invariance of the energy deposition in physics events. In order to extract low energy deposits, the hadron calorimeter is required to operate in non zero-suppressed mode and the output contains mainly HCAL raw data. The typical event size is large due to the non zero-suppressed HCAL output and is approximately 180 kB.

- Isolated track: uses isolated tracks to measure calorimeter response to single pions. The trigger requires an isolated track with a large transverse momentum (at least 10 GeV/c). Recent studies have shown that this trigger can be included as an HLT trigger since the rate is low ($\sim$10 Hz) even though the event size is rather large (hundreds of kB).

For the CRAFT exercise, the AlCaRaw triggers were used with some relaxed criteria in order to record events for testing and validating the workflow for calibration.

## 5 Monitoring of the HLT performance during CRAFT

During CRAFT many tools for monitoring the High-Level trigger were developed and tested. In this section the monitoring of the performance of the muon High-Level triggers is presented, since they were more relevant for the cosmic ray data.

### 5.1 Online DQM

Trigger monitoring at CMS is performed at two different levels: the first makes use of monitoring software run directly in the filter units (see section 5.1.1), the second consists of a quasi-online monitoring system which reads events after HLT processing (see section 5.1.2). The quasi-online monitoring is preferred, since there are no limitations on the allowed bandwidth, which is the case for software running in the HLT.



2010 JINST 5 T03005

### 5.1.1 DQM in the high-level trigger

In the HLT, the filter units process events at rates up to 100 kHz and produce a limited number of histograms. The histograms are delivered from each filter unit to the storage managers at the end of each luminosity section (corresponding to roughly 93 seconds of data taking). Identical histograms are then summed together and sent to a storage manager proxy server, which saves the histograms to files and serves them to DQM consumer applications along with the events. The advantage of monitoring the data in the filter units is that the DQM consumers can access all the events processed by the HLT, including events that will eventually be rejected at this stage. The main focus of the trigger DQM modules in the filter units is to monitor L1 and HLT scalers, and compute rates and rejection factors for each trigger algorithm and filtering stage. During CRAFT fewer than ten histograms were created in this way.

### 5.1.2 Quasi-online DQM

In the HLT a dedicated DQM stream can be implemented that selects any type of events, based on HLT decisions. During CRAFT the HLT typically did not reject any event and an unbiased fraction of events were randomly selected to be sent to the DQM stream. This stream provides detector raw data and, on explicit request, additional HLT information. The DQM applications receive event data coming from the storage manager proxy server using the HTTP protocol. These events can be delivered at a configurable rate, which was set to 25 Hz during CRAFT. The quasi-online monitoring of the trigger includes monitoring of the L1 hardware as well as monitoring of the level of agreement between emulated data and hardware data. The emulator software reproduces the hardware decision for a given trigger configuration, is used to compute trigger efficiencies offline, and allows comparisons with hardware data.

### 5.1.3 Monitoring the performance of the muon HLT

The muon HLT algorithms subdivide the HLT processing into two logical steps: Level-2 (L2) and Level-3 (L3). This nomenclature is common to all HLT triggers in CMS and echos a traditional three-level trigger system. L2 uses L1 muons as seeds and incorporates the full resolution of the muon system and the calorimeters. L3 includes the information from the tracker. The muon trigger reconstruction detects muons by linking tracks in the muon system with deposits in the calorimeter consistent with minimum-ionizing particles and with tracks in the inner tracking system.

Muon HLT triggers used during CRAFT were those that were designed for use during LHC collisions. Since cosmic ray muons only rarely cross the beamline, most of them will not satisfy these muon HLT requirements. Moreover, the muon reconstruction algorithm used in the L3 step of the HLT only performs the tracking within restricted regions around the L2 muon trajectory. This restriction shortens the time required for the L3 processing and allows these triggers to meet the timing constraints of the HLT. This restricted regional tracking algorithm uses the beam spot position to determine the tracking regions, which is not appropriate in the case of cosmic ray muons. Even though not many events are expected to satisfy the muon triggers that require tracking, those that do satisfy this requirement can be used to collect data for studying the performance of the muon HLT algorithms.

The stability of the various triggers during collision data can be measured in terms of trigger rate and as a function of the measured luminosity. For cosmic data taken during CRAFT the



2010 JINST 5 T03005

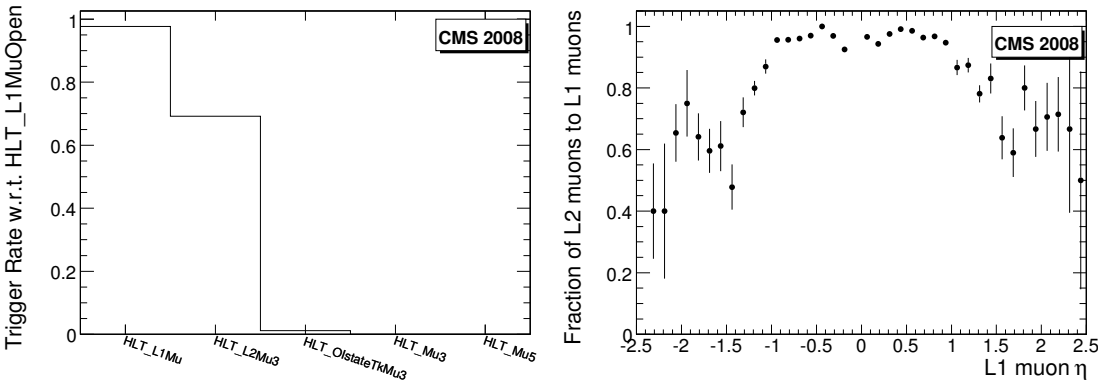


**Figure 2**. Relative rate of the listed triggers with respect to the HLT_L1MuOpen trigger (left) and the fraction of L2 muons to L1 muons as a function of the L1 muon pseudorapidity for events selected by the L2Mu3 trigger (right).

stability was monitored by comparing the rate of each trigger with that of the most inclusive one, HLT_L1MuOpen, a trigger requiring a L1 muon without any momentum or quality restrictions. The performance of the latter was examined separately. The same scheme will be used with collision data and will provide a measurement of the trigger performance which does not depend on uncertainties of luminosity measurements. Figure 2 (left) shows the rate for various muon triggers, with respect to the HLT_L1MuOpen trigger, as measured in the online DQM during a good quality run of 50,000 events. This figure serves as a reference distribution and is used to estimate the stability of HLT performance in other runs. The relative trigger rates depend on trigger and sub-detector configurations; therefore, a few reference distributions, one for each possible configuration, were prepared. The HLT trigger efficiency cannot be precisely measured in online DQM, but the stability of trigger performance can be monitored by comparing the number of L1 seeds and the number of L2 objects for a selected trigger as shown in figure 2 (right). The figure represents the fraction of L2 muons with respect to the number of L1 muons, as a function of the L1 muon pseudorapidity $\eta$. Only events selected by a L2 trigger, L2Mu3, are considered. This figure serves as a reference distribution and changes to it indicate potential modifications in the performance of the muon trigger logic. A more detailed study of L2 and L3 muon trigger efficiencies and a comparison with offline reconstruction algorithms are presented elsewhere [13].

### 5.2 Offline low-latency high-statistics data quality monitoring

The offline reconstruction process at Tier-0 allocates computing resources which can be deployed for systematic data quality monitoring. "Offline DQM" software applications, similar to those described for the online DQM, can be introduced as part of the offline reconstruction task itself. The primary disadvantage of monitoring data in this fashion is the latency of offline reconstruction relative to raw data collection, which can be as long as a few days. The complementary advantages of offline DQM are twofold: all reconstructed events can be monitored, so that less obvious, slowly developing, or rare problems can be identified; and the differences between online and offline physics object reconstruction can be readily studied. During CRAFT, offline DQM measuring of



2010 JINST 5 T03005

the HLT performance was exercised as part of all offline reconstruction operations, and results were available for study as part of the central DQM infrastructure for CMS.

#### 5.2.1 Software

The software applications for offline DQM are identical in structure to those for online DQM discussed previously. The offline DQM produced the following histograms: L1 trigger hardware performance plots, comparison of emulated L1 data with recorded L1 data, as described in the previous section, and plots of basic properties of all objects (muons, jets, etc., from L1, HLT, and offline reconstruction) passing each of the HLT paths. Plotted object properties include transverse energy spectra, $\eta$-$\phi$ occupancy, and object multiplicity. The offline DQM software parses the HLT menu at run time and automatically configures the correct set of plots for each trigger path in the menu. Figure 3 shows the occupancy of muons which passed a L1 muon path for a single CRAFT run. With the large sample size available offline, it is possible to identify regional variations in muon trigger occupancy from run to run.

In addition to object properties recorded for each path, the offline DQM software can require the objects to also pass a (configurable) reference path, allowing for object sampling which is unbiased for trigger efficiency studies. For example, a minimum-bias reference trigger path could be required, and offline muon candidates can be plotted for all events in this reference path, and similarly for all events which pass some muon trigger test path. The quotient of the transverse energy spectra of these two distributions is an estimator of the test path trigger efficiency as a function of transverse energy for muons reconstructed offline. In preparation for proton collisions, more specialized plots will be introduced. Each trigger object type will be analyzed separately, selecting high-purity and low-purity samples for signal efficiency and background rejection studies.

#### 5.2.2 Usage for CRAFT

The offline DQM applications ran regularly as part of offline reconstruction throughout the CRAFT run, and the results were available for viewing by offline DQM shifters. Automated quality tests and data certification were not yet deployed but are planned for data taking. The function of the offline DQM is largely to confirm with higher precision the online DQM results.

Latency for offline DQM studies ranged from as little as an hour to as long as a few days, depending on the reliability of the offline reconstruction at any point in time. No problems were originally diagnosed offline, but it is anticipated that the increased HLT menu complexity and longer integration times of proton collision runs will require offline monitoring to discover more rare or more slowly developing problems.

Other studies of the trigger conducted for the CRAFT run included: emulation of the HLT algorithms offline and comparing the results with the actual HLT data; studies of L1 and HLT performance of cosmic muons; studies of the effect of calorimeter noise on L1 calorimeter triggers, and observation of effects of noise and/or cosmic rays when a menu anticipated for proton collisions was deployed.

### 5.3 Monitoring of the CPU performance

The average CPU time taken to accept or reject events at the HLT depends significantly on the type of event accepted by the L1 trigger. This in turn depends on the sub-detectors included during the



2010 JINST 5 T03005

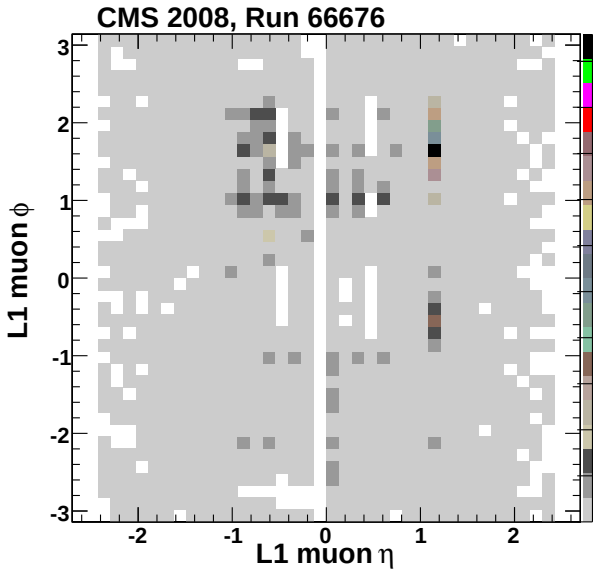


**Figure 3**. Example offline DQM occupancy plot for L1 muon candidates from a single CRAFT run, for events with high-quality cosmic muons reconstructed offline. The plot corresponds to a three hour data taking period with imperfect muon system coverage and demonstrates how this is monitored in an offline DQM occupancy plot.

**Table 1**. Run configuration and total CPU time for runs 66279 and 68021 taken during CRAFT.

| | Run 66279 | Run 68021 |
|---|---|---|
| Events used | 30000 | 30000 |
| Sub-detectors included in run | No ECAL, no tracker no RPC | No HF |
| Magnetic field | 0 T | 3.8 T |
| # of trigger paths | 16 | 24 |
| Average CPU time | 15 ms | 47 ms |

global data taking process, the L1 and HLT prescales, and other operating conditions. In order to track the behavior of the HLT CPU time under distinct configurations, incremental CPU performance studies were carried out using a few runs with different menus. The results for two of these runs are presented in this section.

Runs 66279 and 68021 were recorded during CRAFT using two different HLT menus with different numbers of HLT paths. The sub-detector configuration for these runs is summarized in table 1. In each case, the performance of the full HLT menu was determined by measuring the total HLT processing CPU time when running on a subset of the L1-accepted events. This total CPU time (measured on a Dual-Core 5160 Xeon processor running at 2.0 GHz) includes both the data-unpacking time and the time taken to execute the algorithms.The results scale by 0.7 since the machines used in the Filter Farm run on Quad-Core E5430 Xeon processors at 2.66 GHz.



2010 JINST 5 T03005

The ECAL, the tracker, and the RPC sub-detectors were not included in Run 66279. Furthermore, the HLT menu used was rather simple, as it contained only 16 triggers, which allowed primarily low quality muon objects to pass.

Run 68021 incorporated most of the detectors that were missing in the previous run; however, the forward calorimeter (HF) was not included. In addition, an increase in the number of triggers from 16 to 24 added complexity to the HLT menu. The new triggers included muon triggers with low thresholds that used tracking information, a jet trigger, and a low threshold trigger based on electromagnetic energy. The complexity of the new algorithms (those using tracking information in particular) and the inclusion of the missing sub-detectors are reflected in the three-fold increase of the average CPU time. Taking runs with noisy sub-detectors allowed gauging of the impact of non-optimal operating conditions on the performance of the HLT. After a few such runs, only one algorithm was found to be non-optimal in terms of CPU performance. The data collected during these special runs were used to develop more optimized algorithms that were subsequently deployed online. In one other case, corrupt data from one of the sub-detectors resulted in unexpectedly verbose error logging which in turn had an adverse effect on the HLT processing time. Since this algorithm had previously been extensively and successfully tested on simulated events, this incident reiterated the importance of commissioning the HLT algorithms with data. Following the CRAFT data taking period all HLT algorithms were scrutinized in detail to ensure that error logging was kept to a minimal and that corrupt data were instead detected via DQM applications.

The unpacking of L1 data took 3 to 4 ms and the remaining CPU time was taken up by sub-detector unpacking (based on L1 decisions) and the execution of the HLT algorithms. The L1 unpacking time was approximately the same for all the studies described in this section. This is the expected behavior since the addition of new triggers to a menu does not increase the CPU time for the L1 data unpacking, as this is carried out only once per event.

This monitoring of the CPU performance of the HLT allowed testing of the incremental stability of the system under pronounced variations of conditions and sub-detector configurations.

## 6 Summary and conclusions

The commissioning efforts for the High-Level Trigger in 2009 have built on the progress made during the 2008 CRAFT period. During CRAFT, physics-based selection criteria beyond the L1 decision were integrated into the HLT menus and the latter were run successfully during an extended period of time. The ability to reliably and efficiently collect physics-enriched datasets is critical for collisions, and CRAFT proved invaluable for commissioning HLT operations. We monitored the overall performance of the HLT and confirmed its dependence on trigger design: triggers that are not robust or are not optimized for online performance greatly affect the stability of HLT operations.

These lessons have significantly influenced recent commissioning work. The HLT menus for collisions have been redesigned in preparation for data taking with greater emphasis being paid to simple, inclusive menus with a small set of robust triggers. The triggers present in these new, lean menus are being scrutinized to maximize trigger performance; this includes optimizing the choice of L1 seeds for each trigger, so as to select those events considered most likely to pass the HLT selection algorithms. Reconstruction algorithms are also being analyzed for performance to ensure that fast, reliable trigger decisions can be reached regardless of detector conditions.



2010 JINST 5 T03005

Although individual triggers have been extensively tested on simulated events, changes in data quality delivered by the CMS detector (e.g., noisy or corrupt data) can dramatically influence the trigger behavior. For this reason, HLT DQM operations serve as an important check of the trigger performance. Any change in the trigger behavior can be quickly detected and prompt experts to implement fixes to the existing triggers or design more robust algorithms for future menus. HLT DQM has improved considerably since 2008 as a direct result of the CRAFT experience.

The alignment and calibration workflows were successfully validated during CRAFT. The AlCaRaw datasets were rapidly made available and were used to study detector performance. This demonstrated that the HLT can efficiently provide large datasets that can be used for a rapid calibration of the CMS detector during collision data taking. These efforts have continued in 2009 and remain a successful part of the HLT commissioning process.

## Acknowledgments

We thank the technical and administrative staff at CERN and other CMS Institutes, and acknowledge support from: FMSR (Austria); FNRS and FWO (Belgium); CNPq, CAPES, FAPERJ, and FAPESP (Brazil); MES (Bulgaria); CERN; CAS, MoST, and NSFC (China); COLCIENCIAS (Colombia); MSES (Croatia); RPF (Cyprus); Academy of Sciences and NICPB (Estonia); Academy of Finland, ME, and HIP (Finland); CEA and CNRS/IN2P3 (France); BMBF, DFG, and HGF (Germany); GSRT (Greece); OTKA and NKTH (Hungary); DAE and DST (India); IPM (Iran); SFI (Ireland); INFN (Italy); NRF (Korea); LAS (Lithuania); CINVESTAV, CONACYT, SEP, and UASLP-FAI (Mexico); PAEC (Pakistan); SCSR (Poland); FCT (Portugal); JINR (Armenia, Belarus, Georgia, Ukraine, Uzbekistan); MST and MAE (Russia); MSTDS (Serbia); MICINN and CPAN (Spain); Swiss Funding Agencies (Switzerland); NSC (Taipei); TUBITAK and TAEK (Turkey); STFC (United Kingdom); DOE and NSF (USA). Individuals have received support from the Marie-Curie IEF program (European Union); the Leventis Foundation; the A. P. Sloan Foundation; and the Alexander von Humboldt Foundation.

## References

[1] CMS collaboration, *The CMS experiment at the CERN LHC*, 2008 *JINST* **3** S08004.

[2] L. Evans and P. Bryant eds., *LHC Machine*, 2008 *JINST* **3** S08001.

[3] CMS collaboration, *CMS Physics Technical Design Report, Volume II: Physics Performance*, *J. Phys.* **G 34** (2007) 995.

[4] CMS collaboration, *Commissioning of the CMS experiment and the cosmic run at four tesla*, 2010 *JINST* **5** T03001.

[5] CMS collaboration, *The TriDAS Project: Technical Design Report, Volume 1: The Trigger Systems*, CERN-LHCC-2000-038 (2000).

[6] CMS collaboration, *The TriDAS Project: Technical Design Report, Volume 2: Data Acquisition and High-Level Trigger*, CERN-LHCC-2002-026 (2002).

[7] CMS collaboration, *CMS High Level Trigger*, CERN-LHCC-2007-021 (2007).

[8] L. Agostino et al., *Commissioning of the CMS High Level Trigger*, 2009 *JINST* **4** P10005 [arXiv:0908.1065].



2010 JINST 5 T03005

[9] CMS collaboration, *Performance of the CMS Level-1 trigger during commissioning with cosmic ray muons and LHC beams*, 2010 *JINST* **5** T03002.

[10] R. Bailey and P. Collier, *Standard Filling Schemes for Various LHC Operation Modes*, LHC-PROJECT-NOTE-323 (2003).

[11] CMS collaboration, *Performance of Jet Algorithms in CMS*, CMS-PAS-JME-07-003 (2008).

[12] CMS collaboration, *Searching for Stopped Gluinos during Beam-off Periods at CMS*, CMS-PAS-EXO-09-001 (2009).

[13] CMS collaboration, *Performance of CMS muon reconstruction in cosmic-ray events*, 2010 *JINST* **5** T03022.

2010 JINST 5 T03005

## The CMS collaboration

**Yerevan Physics Institute, Yerevan, Armenia**
S. Chatrchyan, V. Khachatryan, A.M. Sirunyan

**Institut für Hochenergiephysik der OeAW, Wien, Austria**
W. Adam, B. Arnold, H. Bergauer, T. Bergauer, M. Dragicevic, M. Eichberger, J. Erö, M. Friedl, R. Frühwirth, V.M. Ghete, J. Hammer[1], S. Hänsel, M. Hoch, N. Hörmann, J. Hrubec, M. Jeitler, G. Kasieczka, K. Kastner, M. Krammer, D. Liko, I. Magrans de Abril, I. Mikulec, F. Mittermayr, B. Neuherz, M. Oberegger, M. Padrta, M. Pernicka, H. Rohringer, S. Schmid, R. Schöfbeck, T. Schreiner, R. Stark, H. Steininger, J. Strauss, A. Taurok, F. Teischinger, T. Themel, D. Uhl, P. Wagner, W. Waltenberger, G. Walzel, E. Widl, C.-E. Wulz

**National Centre for Particle and High Energy Physics, Minsk, Belarus**
V. Chekhovsky, O. Dvornikov, I. Emeliantchik, A. Litomin, V. Makarenko, I. Marfin, V. Mossolov, N. Shumeiko, A. Solin, R. Stefanovitch, J. Suarez Gonzalez, A. Tikhonov

**Research Institute for Nuclear Problems, Minsk, Belarus**
A. Fedorov, A. Karneyeu, M. Korzhik, V. Panov, R. Zuyeuski

**Research Institute of Applied Physical Problems, Minsk, Belarus**
P. Kuchinsky

**Universiteit Antwerpen, Antwerpen, Belgium**
W. Beaumont, L. Benucci, M. Cardaci, E.A. De Wolf, E. Delmeire, D. Druzhkin, M. Hashemi, X. Janssen, T. Maes, L. Mucibello, S. Ochesanu, R. Rougny, M. Selvaggi, H. Van Haevermaet, P. Van Mechelen, N. Van Remortel

**Vrije Universiteit Brussel, Brussel, Belgium**
V. Adler, S. Beauceron, S. Blyweert, J. D'Hondt, S. De Weirdt, O. Devroede, J. Heyninck, A. Kalogeropoulos, J. Maes, M. Maes, M.U. Mozer, S. Tavernier, W. Van Doninck[1], P. Van Mulders, I. Villella

**Université Libre de Bruxelles, Bruxelles, Belgium**
O. Bouhali, E.C. Chabert, O. Charaf, B. Clerbaux, G. De Lentdecker, V. Dero, S. Elgammal, A.P.R. Gay, G.H. Hammad, P.E. Marage, S. Rugovac, C. Vander Velde, P. Vanlaer, J. Wickens

**Ghent University, Ghent, Belgium**
M. Grunewald, B. Klein, A. Marinov, D. Ryckbosch, F. Thyssen, M. Tytgat, L. Vanelderen, P. Verwilligen

**Université Catholique de Louvain, Louvain-la-Neuve, Belgium**
S. Basegmez, G. Bruno, J. Caudron, C. Delaere, P. Demin, D. Favart, A. Giammanco, G. Grégoire, V. Lemaitre, O. Militaru, S. Ovyn, K. Piotrzkowski[1], L. Quertenmont, N. Schul

**Université de Mons, Mons, Belgium**
N. Beliy, E. Daubie

**Centro Brasileiro de Pesquisas Fisicas, Rio de Janeiro, Brazil**
G.A. Alves, M.E. Pol, M.H.G. Souza

2010 JINST 5 T03005

**Universidade do Estado do Rio de Janeiro, Rio de Janeiro, Brazil**
W. Carvalho, D. De Jesus Damiao, C. De Oliveira Martins, S. Fonseca De Souza, L. Mundim, V. Oguri, A. Santoro, S.M. Silva Do Amaral, A. Sznajder

**Instituto de Fisica Teorica, Universidade Estadual Paulista, Sao Paulo, Brazil**
T.R. Fernandez Perez Tomei, M.A. Ferreira Dias, E. M. Gregores[2], S.F. Novaes

**Institute for Nuclear Research and Nuclear Energy, Sofia, Bulgaria**
K. Abadjiev[1], T. Anguelov, J. Damgov, N. Darmenov[1], L. Dimitrov, V. Genchev[1], P. Iaydjiev, S. Piperov, S. Stoykova, G. Sultanov, R. Trayanov, I. Vankov

**University of Sofia, Sofia, Bulgaria**
A. Dimitrov, M. Dyulendarova, V. Kozhuharov, L. Litov, E. Marinova, M. Mateev, B. Pavlov, P. Petkov, Z. Toteva[1]

**Institute of High Energy Physics, Beijing, China**
G.M. Chen, H.S. Chen, W. Guan, C.H. Jiang, D. Liang, B. Liu, X. Meng, J. Tao, J. Wang, Z. Wang, Z. Xue, Z. Zhang

**State Key Lab. of Nucl. Phys. and Tech., Peking University, Beijing, China**
Y. Ban, J. Cai, Y. Ge, S. Guo, Z. Hu, Y. Mao, S.J. Qian, H. Teng, B. Zhu

**Universidad de Los Andes, Bogota, Colombia**
C. Avila, M. Baquero Ruiz, C.A. Carrillo Montoya, A. Gomez, B. Gomez Moreno, A.A. Ocampo Rios, A.F. Osorio Oliveros, D. Reyes Romero, J.C. Sanabria

**Technical University of Split, Split, Croatia**
N. Godinovic, K. Lelas, R. Plestina, D. Polic, I. Puljak

**University of Split, Split, Croatia**
Z. Antunovic, M. Dzelalija

**Institute Rudjer Boskovic, Zagreb, Croatia**
V. Brigljevic, S. Duric, K. Kadija, S. Morovic

**University of Cyprus, Nicosia, Cyprus**
R. Fereos, M. Galanti, J. Mousa, A. Papadakis, F. Ptochos, P.A. Razis, D. Tsiakkouri, Z. Zinonos

**National Institute of Chemical Physics and Biophysics, Tallinn, Estonia**
A. Hektor, M. Kadastik, K. Kannike, M. Müntel, M. Raidal, L. Rebane

**Helsinki Institute of Physics, Helsinki, Finland**
E. Anttila, S. Czellar, J. Härkönen, A. Heikkinen, V. Karimäki, R. Kinnunen, J. Klem, M.J. Kortelainen, T. Lampén, K. Lassila-Perini, S. Lehti, T. Lindén, P. Luukka, T. Mäenpää, J. Nysten, E. Tuominen, J. Tuominiemi, D. Ungaro, L. Wendland

**Lappeenranta University of Technology, Lappeenranta, Finland**
K. Banzuzi, A. Korpela, T. Tuuva

**Laboratoire d'Annecy-le-Vieux de Physique des Particules, IN2P3-CNRS, Annecy-le-Vieux, France**
P. Nedelec, D. Sillou

2010 JINST 5 T03005

**DSM/IRFU, CEA/Saclay, Gif-sur-Yvette, France**
M. Besancon, R. Chipaux, M. Dejardin, D. Denegri, J. Descamps, B. Fabbro, J.L. Faure, F. Ferri, S. Ganjour, F.X. Gentit, A. Givernaud, P. Gras, G. Hamel de Monchenault, P. Jarry, M.C. Lemaire, E. Locci, J. Malcles, M. Marionneau, L. Millischer, J. Rander, A. Rosowsky, D. Rousseau, M. Titov, P. Verrecchia

**Laboratoire Leprince-Ringuet, Ecole Polytechnique, IN2P3-CNRS, Palaiseau, France**
S. Baffioni, L. Bianchini, M. Bluj[3], P. Busson, C. Charlot, L. Dobrzynski, R. Granier de Cassagnac, M. Haguenauer, P. Miné, P. Paganini, Y. Sirois, C. Thiebaux, A. Zabi

**Institut Pluridisciplinaire Hubert Curien, Université de Strasbourg, Université de Haute Alsace Mulhouse, CNRS/IN2P3, Strasbourg, France**
J.-L. Agram[4], A. Besson, D. Bloch, D. Bodin, J.-M. Brom, E. Conte[4], F. Drouhin[4], J.-C. Fontaine[4], D. Gelé, U. Goerlach, L. Gross, P. Juillot, A.-C. Le Bihan, Y. Patois, J. Speck, P. Van Hove

**Université de Lyon, Université Claude Bernard Lyon 1, CNRS-IN2P3, Institut de Physique Nucléaire de Lyon, Villeurbanne, France**
C. Baty, M. Bedjidian, J. Blaha, G. Boudoul, H. Brun, N. Chanon, R. Chierici, D. Contardo, P. Depasse, T. Dupasquier, H. El Mamouni, F. Fassi[5], J. Fay, S. Gascon, B. Ille, T. Kurca, T. Le Grand, M. Lethuillier, N. Lumb, L. Mirabito, S. Perries, M. Vander Donckt, P. Verdier

**E. Andronikashvili Institute of Physics, Academy of Science, Tbilisi, Georgia**
N. Djaoshvili, N. Roinishvili, V. Roinishvili

**Institute of High Energy Physics and Informatization, Tbilisi State University, Tbilisi, Georgia**
N. Amaglobeli

**RWTH Aachen University, I. Physikalisches Institut, Aachen, Germany**
R. Adolphi, G. Anagnostou, R. Brauer, W. Braunschweig, M. Edelhoff, H. Esser, L. Feld, W. Karpinski, A. Khomich, K. Klein, N. Mohr, A. Ostaptchouk, D. Pandoulas, G. Pierschel, F. Raupach, S. Schael, A. Schultz von Dratzig, G. Schwering, D. Sprenger, M. Thomas, M. Weber, B. Wittmer, M. Wlochal

**RWTH Aachen University, III. Physikalisches Institut A, Aachen, Germany**
O. Actis, G. Altenhöfer, W. Bender, P. Biallass, M. Erdmann, G. Fetchenhauer[1], J. Frangenheim, T. Hebbeker, G. Hilgers, A. Hinzmann, K. Hoepfner, C. Hof, M. Kirsch, T. Klimkovich, P. Kreuzer[1], D. Lanske[†], M. Merschmeyer, A. Meyer, B. Philipps, H. Pieta, H. Reithler, S.A. Schmitz, L. Sonnenschein, M. Sowa, J. Steggemann, H. Szczesny, D. Teyssier, C. Zeidler

**RWTH Aachen University, III. Physikalisches Institut B, Aachen, Germany**
M. Bontenackels, M. Davids, M. Duda, G. Flügge, H. Geenen, M. Giffels, W. Haj Ahmad, T. Hermanns, D. Heydhausen, S. Kalinin, T. Kress, A. Linn, A. Nowack, L. Perchalla, M. Poettgens, O. Pooth, P. Sauerland, A. Stahl, D. Tornier, M.H. Zoeller

**Deutsches Elektronen-Synchrotron, Hamburg, Germany**
M. Aldaya Martin, U. Behrens, K. Borras, A. Campbell, E. Castro, D. Dammann, G. Eckerlin, A. Flossdorf, G. Flucke, A. Geiser, D. Hatton, J. Hauk, H. Jung, M. Kasemann, I. Katkov, C. Kleinwort, H. Kluge, A. Knutsson, E. Kuznetsova, W. Lange, W. Lohmann, R. Mankel[1],

2010 JINST 5 T03005

M. Marienfeld, A.B. Meyer, S. Miglioranzi, J. Mnich, M. Ohlerich, J. Olzem, A. Parenti, C. Rosemann, R. Schmidt, T. Schoerner-Sadenius, D. Volyanskyy, C. Wissing, W.D. Zeuner[1]

**University of Hamburg, Hamburg, Germany**
C. Autermann, F. Bechtel, J. Draeger, D. Eckstein, U. Gebbert, K. Kaschube, G. Kaussen, R. Klanner, B. Mura, S. Naumann-Emme, F. Nowak, U. Pein, C. Sander, P. Schleper, T. Schum, H. Stadie, G. Steinbrück, J. Thomsen, R. Wolf

**Institut für Experimentelle Kernphysik, Karlsruhe, Germany**
J. Bauer, P. Blüm, V. Buege, A. Cakir, T. Chwalek, W. De Boer, A. Dierlamm, G. Dirkes, M. Feindt, U. Felzmann, M. Frey, A. Furgeri, J. Gruschke, C. Hackstein, F. Hartmann[1], S. Heier, M. Heinrich, H. Held, D. Hirschbuehl, K.H. Hoffmann, S. Honc, C. Jung, T. Kuhr, T. Liamsuwan, D. Martschei, S. Mueller, Th. Müller, M.B. Neuland, M. Niegel, O. Oberst, A. Oehler, J. Ott, T. Peiffer, D. Piparo, G. Quast, K. Rabbertz, F. Ratnikov, N. Ratnikova, M. Renz, C. Saout[1], G. Sartisohn, A. Scheurer, P. Schieferdecker, F.-P. Schilling, G. Schott, H.J. Simonis, F.M. Stober, P. Sturm, D. Troendle, A. Trunov, W. Wagner, J. Wagner-Kuhr, M. Zeise, V. Zhukov[6], E.B. Ziebarth

**Institute of Nuclear Physics "Demokritos", Aghia Paraskevi, Greece**
G. Daskalakis, T. Geralis, K. Karafasoulis, A. Kyriakis, D. Loukas, A. Markou, C. Markou, C. Mavrommatis, E. Petrakou, A. Zachariadou

**University of Athens, Athens, Greece**
L. Gouskos, P. Katsas, A. Panagiotou[1]

**University of Ioánnina, Ioánnina, Greece**
I. Evangelou, P. Kokkas, N. Manthos, I. Papadopoulos, V. Patras, F.A. Triantis

**KFKI Research Institute for Particle and Nuclear Physics, Budapest, Hungary**
G. Bencze[1], L. Boldizsar, G. Debreczeni, C. Hajdu[1], S. Hernath, P. Hidas, D. Horvath[7], K. Krajczar, A. Laszlo, G. Patay, F. Sikler, N. Toth, G. Vesztergombi

**Institute of Nuclear Research ATOMKI, Debrecen, Hungary**
N. Beni, G. Christian, J. Imrek, J. Molnar, D. Novak, J. Palinkas, G. Szekely, Z. Szillasi[1], K. Tokesi, V. Veszpremi

**University of Debrecen, Debrecen, Hungary**
A. Kapusi, G. Marian, P. Raics, Z. Szabo, Z.L. Trocsanyi, B. Ujvari, G. Zilizi

**Panjab University, Chandigarh, India**
S. Bansal, H.S. Bawa, S.B. Beri, V. Bhatnagar, M. Jindal, M. Kaur, R. Kaur, J.M. Kohli, M.Z. Mehta, N. Nishu, L.K. Saini, A. Sharma, A. Singh, J.B. Singh, S.P. Singh

**University of Delhi, Delhi, India**
S. Ahuja, S. Arora, S. Bhattacharya[8], S. Chauhan, B.C. Choudhary, P. Gupta, S. Jain, S. Jain, M. Jha, A. Kumar, K. Ranjan, R.K. Shivpuri, A.K. Srivastava

**Bhabha Atomic Research Centre, Mumbai, India**
R.K. Choudhury, D. Dutta, S. Kailas, S.K. Kataria, A.K. Mohanty, L.M. Pant, P. Shukla, A. Topkar

**Tata Institute of Fundamental Research - EHEP, Mumbai, India**
T. Aziz, M. Guchait[9], A. Gurtu, M. Maity[10], D. Majumder, G. Majumder, K. Mazumdar, A. Nayak, A. Saha, K. Sudhakar

2010 JINST 5 T03005

**Tata Institute of Fundamental Research - HECR, Mumbai, India**
S. Banerjee, S. Dugad, N.K. Mondal

**Institute for Studies in Theoretical Physics & Mathematics (IPM), Tehran, Iran**
H. Arfaei, H. Bakhshiansohi, A. Fahim, A. Jafari, M. Mohammadi Najafabadi, A. Moshaii, S. Paktinat Mehdiabadi, S. Rouhani, B. Safarzadeh, M. Zeinali

**University College Dublin, Dublin, Ireland**
M. Felcini

**INFN Sezione di Bari [a], Università di Bari [b], Politecnico di Bari [c], Bari, Italy**
M. Abbrescia[a,b], L. Barbone[a], F. Chiumarulo[a], A. Clemente[a], A. Colaleo[a], D. Creanza[a,c], G. Cuscela[a], N. De Filippis[a], M. De Palma[a,b], G. De Robertis[a], G. Donvito[a], F. Fedele[a], L. Fiore[a], M. Franco[a], G. Iaselli[a,c], N. Lacalamita[a], F. Loddo[a], L. Lusito[a,b], G. Maggi[a,c], M. Maggi[a], N. Manna[a,b], B. Marangelli[a,b], S. My[a,c], S. Natali[a,b], S. Nuzzo[a,b], G. Papagni[a], S. Piccolomo[a], G.A. Pierro[a], C. Pinto[a], A. Pompili[a,b], G. Pugliese[a,c], R. Rajan[a], A. Ranieri[a], F. Romano[a,c], G. Roselli[a,b], G. Selvaggi[a,b], Y. Shinde[a], L. Silvestris[a], S. Tupputi[a,b], G. Zito[a]

**INFN Sezione di Bologna [a], Universita di Bologna [b], Bologna, Italy**
G. Abbiendi[a], W. Bacchi[a,b], A.C. Benvenuti[a], M. Boldini[a], D. Bonacorsi[a], S. Braibant-Giacomelli[a,b], V.D. Cafaro[a], S.S. Caiazza[a], P. Capiluppi[a,b], A. Castro[a,b], F.R. Cavallo[a], G. Codispoti[a,b], M. Cuffiani[a,b], I. D'Antone[a], G.M. Dallavalle[a,1], F. Fabbri[a], A. Fanfani[a,b], D. Fasanella[a], P. Giacomelli[a], V. Giordano[a], M. Giunta[a,1], C. Grandi[a], M. Guerzoni[a], S. Marcellini[a], G. Masetti[a,b], A. Montanari[a], F.L. Navarria[a,b], F. Odorici[a], G. Pellegrini[a], A. Perrotta[a], A.M. Rossi[a,b], T. Rovelli[a,b], G. Siroli[a,b], G. Torromeo[a], R. Travaglini[a,b]

**INFN Sezione di Catania [a], Universita di Catania [b], Catania, Italy**
S. Albergo[a,b], S. Costa[a,b], R. Potenza[a,b], A. Tricomi[a,b], C. Tuve[a]

**INFN Sezione di Firenze [a], Universita di Firenze [b], Firenze, Italy**
G. Barbagli[a], G. Broccolo[a,b], V. Ciulli[a,b], C. Civinini[a], R. D'Alessandro[a,b], E. Focardi[a,b], S. Frosali[a,b], E. Gallo[a], C. Genta[a,b], G. Landi[a,b], P. Lenzi[a,b,1], M. Meschini[a], S. Paoletti[a], G. Sguazzoni[a], A. Tropiano[a]

**INFN Laboratori Nazionali di Frascati, Frascati, Italy**
L. Benussi, M. Bertani, S. Bianco, S. Colafranceschi[11], D. Colonna[11], F. Fabbri, M. Giardoni, L. Passamonti, D. Piccolo, D. Pierluigi, B. Ponzio, A. Russo

**INFN Sezione di Genova, Genova, Italy**
P. Fabbricatore, R. Musenich

**INFN Sezione di Milano-Biccoca [a], Universita di Milano-Bicocca [b], Milano, Italy**
A. Benaglia[a], M. Calloni[a], G.B. Cerati[a,b,1], P. D'Angelo[a], F. De Guio[a], F.M. Farina[a], A. Ghezzi[a], P. Govoni[a,b], M. Malberti[a,b,1], S. Malvezzi[a], A. Martelli[a], D. Menasce[a], V. Miccio[a,b], L. Moroni[a], P. Negri[a,b], M. Paganoni[a,b], D. Pedrini[a], A. Pullia[a,b], S. Ragazzi[a,b], N. Redaelli[a], S. Sala[a], R. Salerno[a,b], T. Tabarelli de Fatis[a,b], V. Tancini[a,b], S. Taroni[a,b]

**INFN Sezione di Napoli [a], Universita di Napoli "Federico II" [b], Napoli, Italy**
S. Buontempo[a], N. Cavallo[a], A. Cimmino[a,b,1], M. De Gruttola[a,b,1], F. Fabozzi[a,12], A.O.M. Iorio[a], L. Lista[a], D. Lomidze[a], P. Noli[a,b], P. Paolucci[a], C. Sciacca[a,b]

2010 JINST 5 T03005

**INFN Sezione di Padova [a], Università di Padova [b], Padova, Italy**
P. Azzi[a,1], N. Bacchetta[a], L. Barcellan[a], P. Bellan[a,b,1], M. Bellato[a], M. Benettoni[a], M. Biasotto[a,13], D. Bisello[a,b], E. Borsato[a,b], A. Branca[a], R. Carlin[a,b], L. Castellani[a], P. Checchia[a], E. Conti[a], F. Dal Corso[a], M. De Mattia[a,b], T. Dorigo[a], U. Dosselli[a], F. Fanzago[a], F. Gasparini[a,b], U. Gasparini[a,b], P. Giubilato[a,b], F. Gonella[a], A. Gresele[a,14], M. Gulmini[a,13], A. Kaminskiy[a,b], S. Lacaprara[a,13], I. Lazzizzera[a,14], M. Margoni[a,b], G. Maron[a,13], S. Mattiazzo[a,b], M. Mazzucato[a], M. Meneghelli[a], A.T. Meneguzzo[a,b], M. Michelotto[a], F. Montecassiano[a], M. Nespolo[a], M. Passaseo[a], M. Pegoraro[a], L. Perrozzi[a], N. Pozzobon[a,b], P. Ronchese[a,b], F. Simonetto[a,b], N. Toniolo[a], E. Torassa[a], M. Tosi[a,b], A. Triossi[a], S. Vanini[a,b], S. Ventura[a], P. Zotto[a,b], G. Zumerle[a,b]

**INFN Sezione di Pavia [a], Universita di Pavia [b], Pavia, Italy**
P. Baesso[a,b], U. Berzano[a], S. Bricola[a], M.M. Necchi[a,b], D. Pagano[a,b], S.P. Ratti[a,b], C. Riccardi[a,b], P. Torre[a,b], A. Vicini[a], P. Vitulo[a,b], C. Viviani[a,b]

**INFN Sezione di Perugia [a], Universita di Perugia [b], Perugia, Italy**
D. Aisa[a], S. Aisa[a], E. Babucci[a], M. Biasini[a,b], G.M. Bilei[a], B. Caponeri[a,b], B. Checcucci[a], N. Dinu[a], L. Fanò[a], L. Farnesini[a], P. Lariccia[a,b], A. Lucaroni[a,b], G. Mantovani[a,b], A. Nappi[a,b], A. Piluso[a], V. Postolache[a], A. Santocchia[a,b], L. Servoli[a], D. Tonoiu[a], A. Vedaee[a], R. Volpe[a,b]

**INFN Sezione di Pisa [a], Universita di Pisa [b], Scuola Normale Superiore di Pisa [c], Pisa, Italy**
P. Azzurri[a,c], G. Bagliesi[a], J. Bernardini[a,b], L. Berretta[a], T. Boccali[a], A. Bocci[a,c], L. Borrello[a,c], F. Bosi[a], F. Calzolari[a], R. Castaldi[a], R. Dell'Orso[a], F. Fiori[a,b], L. Foà[a,c], S. Gennai[a,c], A. Giassi[a], A. Kraan[a], F. Ligabue[a,c], T. Lomtadze[a], F. Mariani[a], L. Martini[a], M. Massa[a], A. Messineo[a,b], A. Moggi[a], F. Palla[a], F. Palmonari[a], G. Petragnani[a], G. Petrucciani[a,c], F. Raffaelli[a], S. Sarkar[a], G. Segneri[a], A.T. Serban[a], P. Spagnolo[a,1], R. Tenchini[a,1], S. Tolaini[a], G. Tonelli[a,b,1], A. Venturi[a], P.G. Verdini[a]

**INFN Sezione di Roma [a], Universita di Roma "La Sapienza" [b], Roma, Italy**
S. Baccaro[a,15], L. Barone[a,b], A. Bartoloni[a], F. Cavallari[a,1], I. Dafinei[a], D. Del Re[a,b], E. Di Marco[a,b], M. Diemoz[a], D. Franci[a,b], E. Longo[a,b], G. Organtini[a,b], A. Palma[a,b], F. Pandolfi[a,b], R. Paramatti[a,1], F. Pellegrino[a], S. Rahatlou[a,b], C. Rovelli[a]

**INFN Sezione di Torino [a], Università di Torino [b], Università del Piemonte Orientale (Novara) [c], Torino, Italy**
G. Alampi[a], N. Amapane[a,b], R. Arcidiacono[a,b], S. Argiro[a,b], M. Arneodo[a,c], C. Biino[a], M.A. Borgia[a,b], C. Botta[a,b], N. Cartiglia[a], R. Castello[a,b], G. Cerminara[a,b], M. Costa[a,b], D. Dattola[a], G. Dellacasa[a], N. Demaria[a], G. Dughera[a], F. Dumitrache[a], A. Graziano[a,b], C. Mariotti[a], M. Marone[a,b], S. Maselli[a], E. Migliore[a,b], G. Mila[a,b], V. Monaco[a,b], M. Musich[a,b], M. Nervo[a,b], M.M. Obertino[a,c], S. Oggero[a,b], R. Panero[a], N. Pastrone[a], M. Pelliccioni[a,b], A. Romero[a,b], M. Ruspa[a,c], R. Sacchi[a,b], A. Solano[a,b], A. Staiano[a], P.P. Trapani[a,b,1], D. Trocino[a,b], A. Vilela Pereira[a,b], L. Visca[a,b], A. Zampieri[a]

**INFN Sezione di Trieste [a], Universita di Trieste [b], Trieste, Italy**
F. Ambroglini[a,b], S. Belforte[a], F. Cossutti[a], G. Della Ricca[a,b], B. Gobbo[a], A. Penzo[a]

**Kyungpook National University, Daegu, Korea**
S. Chang, J. Chung, D.H. Kim, G.N. Kim, D.J. Kong, H. Park, D.C. Son

2010 JINST 5 T03005

**Wonkwang University, Iksan, Korea**
S.Y. Bahk

**Chonnam National University, Kwangju, Korea**
S. Song

**Konkuk University, Seoul, Korea**
S.Y. Jung

**Korea University, Seoul, Korea**
B. Hong, H. Kim, J.H. Kim, K.S. Lee, D.H. Moon, S.K. Park, H.B. Rhee, K.S. Sim

**Seoul National University, Seoul, Korea**
J. Kim

**University of Seoul, Seoul, Korea**
M. Choi, G. Hahn, I.C. Park

**Sungkyunkwan University, Suwon, Korea**
S. Choi, Y. Choi, J. Goh, H. Jeong, T.J. Kim, J. Lee, S. Lee

**Vilnius University, Vilnius, Lithuania**
M. Janulis, D. Martisiute, P. Petrov, T. Sabonis

**Centro de Investigacion y de Estudios Avanzados del IPN, Mexico City, Mexico**
H. Castilla Valdez[1], A. Sánchez Hernández

**Universidad Iberoamericana, Mexico City, Mexico**
S. Carrillo Moreno

**Universidad Autónoma de San Luis Potosí, San Luis Potosí, Mexico**
A. Morelos Pineda

**University of Auckland, Auckland, New Zealand**
P. Allfrey, R.N.C. Gray, D. Krofcheck

**University of Canterbury, Christchurch, New Zealand**
N. Bernardino Rodrigues, P.H. Butler, T. Signal, J.C. Williams

**National Centre for Physics, Quaid-I-Azam University, Islamabad, Pakistan**
M. Ahmad, I. Ahmed, W. Ahmed, M.I. Asghar, M.I.M. Awan, H.R. Hoorani, I. Hussain, W.A. Khan, T. Khurshid, S. Muhammad, S. Qazi, H. Shahzad

**Institute of Experimental Physics, Warsaw, Poland**
M. Cwiok, R. Dabrowski, W. Dominik, K. Doroba, M. Konecki, J. Krolikowski, K. Pozniak[16], R. Romaniuk, W. Zabolotny[16], P. Zych

**Soltan Institute for Nuclear Studies, Warsaw, Poland**
T. Frueboes, R. Gokieli, L. Goscilo, M. Górski, M. Kazana, K. Nawrocki, M. Szleper, G. Wrochna, P. Zalewski

**Laboratório de Instrumentação e Física Experimental de Partículas, Lisboa, Portugal**
N. Almeida, L. Antunes Pedro, P. Bargassa, A. David, P. Faccioli, P.G. Ferreira Parracho, M. Freitas Ferreira, M. Gallinaro, M. Guerra Jordao, P. Martins, G. Mini, P. Musella, J. Pela, L. Raposo, P.Q. Ribeiro, S. Sampaio, J. Seixas, J. Silva, P. Silva, D. Soares, M. Sousa, J. Varela, H.K. Wöhri

2010 JINST 5 T03005

**Joint Institute for Nuclear Research, Dubna, Russia**
I. Altsybeev, I. Belotelov, P. Bunin, Y. Ershov, I. Filozova, M. Finger, M. Finger Jr., A. Golunov, I. Golutvin, N. Gorbounov, V. Kalagin, A. Kamenev, V. Karjavin, V. Konoplyanikov, V. Korenkov, G. Kozlov, A. Kurenkov, A. Lanev, A. Makankin, V.V. Mitsyn, P. Moisenz, E. Nikonov, D. Oleynik, V. Palichik, V. Perelygin, A. Petrosyan, R. Semenov, S. Shmatov, V. Smirnov, D. Smolin, E. Tikhonenko, S. Vasil'ev, A. Vishnevskiy, A. Volodko, A. Zarubin, V. Zhiltsov

**Petersburg Nuclear Physics Institute, Gatchina (St Petersburg), Russia**
N. Bondar, L. Chtchipounov, A. Denisov, Y. Gavrikov, G. Gavrilov, V. Golovtsov, Y. Ivanov, V. Kim, V. Kozlov, P. Levchenko, G. Obrant, E. Orishchin, A. Petrunin, Y. Shcheglov, A. Shchetkovskiy, V. Sknar, I. Smirnov, V. Sulimov, V. Tarakanov, L. Uvarov, S. Vavilov, G. Velichko, S. Volkov, A. Vorobyev

**Institute for Nuclear Research, Moscow, Russia**
Yu. Andreev, A. Anisimov, P. Antipov, A. Dermenev, S. Gninenko, N. Golubev, M. Kirsanov, N. Krasnikov, V. Matveev, A. Pashenkov, V.E. Postoev, A. Solovey, A. Solovey, A. Toropin, S. Troitsky

**Institute for Theoretical and Experimental Physics, Moscow, Russia**
A. Baud, V. Epshteyn, V. Gavrilov, N. Ilina, V. Kaftanov[†], V. Kolosov, M. Kossov[1], A. Krokhotin, S. Kuleshov, A. Oulianov, G. Safronov, S. Semenov, I. Shreyber, V. Stolin, E. Vlasov, A. Zhokin

**Moscow State University, Moscow, Russia**
E. Boos, M. Dubinin[17], L. Dudko, A. Ershov, A. Gribushin, V. Klyukhin, O. Kodolova, I. Lokhtin, S. Petrushanko, L. Sarycheva, V. Savrin, A. Snigirev, I. Vardanyan

**P.N. Lebedev Physical Institute, Moscow, Russia**
I. Dremin, M. Kirakosyan, N. Konovalova, S.V. Rusakov, A. Vinogradov

**State Research Center of Russian Federation, Institute for High Energy Physics, Protvino, Russia**
S. Akimenko, A. Artamonov, I. Azhgirey, S. Bitioukov, V. Burtovoy, V. Grishin[1], V. Kachanov, D. Konstantinov, V. Krychkine, A. Levine, I. Lobov, V. Lukanin, Y. Mel'nik, V. Petrov, R. Ryutin, S. Slabospitsky, A. Sobol, A. Sytine, L. Tourtchanovitch, S. Troshin, N. Tyurin, A. Uzunian, A. Volkov

**Vinca Institute of Nuclear Sciences, Belgrade, Serbia**
P. Adzic, M. Djordjevic, D. Jovanovic[18], D. Krpic[18], D. Maletic, J. Puzovic[18], N. Smiljkovic

**Centro de Investigaciones Energéticas Medioambientales y Tecnológicas (CIEMAT), Madrid, Spain**
M. Aguilar-Benitez, J. Alberdi, J. Alcaraz Maestre, P. Arce, J.M. Barcala, C. Battilana, C. Burgos Lazaro, J. Caballero Bejar, E. Calvo, M. Cardenas Montes, M. Cepeda, M. Cerrada, M. Chamizo Llatas, F. Clemente, N. Colino, M. Daniel, B. De La Cruz, A. Delgado Peris, C. Diez Pardos, C. Fernandez Bedoya, J.P. Fernández Ramos, A. Ferrando, J. Flix, M.C. Fouz, P. Garcia-Abia, A.C. Garcia-Bonilla, O. Gonzalez Lopez, S. Goy Lopez, J.M. Hernandez, M.I. Josa, J. Marin, G. Merino, J. Molina, A. Molinero, J.J. Navarrete, J.C. Oller, J. Puerta Pelayo, L. Romero, J. Santaolalla, C. Villanueva Munoz, C. Willmott, C. Yuste

2010 JINST 5 T03005

**Universidad Autónoma de Madrid, Madrid, Spain**
C. Albajar, M. Blanco Otano, J.F. de Trocóniz, A. Garcia Raboso, J.O. Lopez Berengueres

**Universidad de Oviedo, Oviedo, Spain**
J. Cuevas, J. Fernandez Menendez, I. Gonzalez Caballero, L. Lloret Iglesias, H. Naves Sordo, J.M. Vizan Garcia

**Instituto de Física de Cantabria (IFCA), CSIC-Universidad de Cantabria, Santander, Spain**
I.J. Cabrillo, A. Calderon, S.H. Chuang, I. Diaz Merino, C. Diez Gonzalez, J. Duarte Campderros, M. Fernandez, G. Gomez, J. Gonzalez Sanchez, R. Gonzalez Suarez, C. Jorda, P. Lobelle Pardo, A. Lopez Virto, J. Marco, R. Marco, C. Martinez Rivero, P. Martinez Ruiz del Arbol, F. Matorras, T. Rodrigo, A. Ruiz Jimeno, L. Scodellaro, M. Sobron Sanudo, I. Vila, R. Vilar Cortabitarte

**CERN, European Organization for Nuclear Research, Geneva, Switzerland**
D. Abbaneo, E. Albert, M. Alidra, S. Ashby, E. Auffray, J. Baechler, P. Baillon, A.H. Ball, S.L. Bally, D. Barney, F. Beaudette[19], R. Bellan, D. Benedetti, G. Benelli, C. Bernet, P. Bloch, S. Bolognesi, M. Bona, J. Bos, N. Bourgeois, T. Bourrel, H. Breuker, K. Bunkowski, D. Campi, T. Camporesi, E. Cano, A. Cattai, J.P. Chatelain, M. Chauvey, T. Christiansen, J.A. Coarasa Perez, A. Conde Garcia, R. Covarelli, B. Curé, A. De Roeck, V. Delachenal, D. Deyrail, S. Di Vincenzo[20], S. Dos Santos, T. Dupont, L.M. Edera, A. Elliott-Peisert, M. Eppard, M. Favre, N. Frank, W. Funk, A. Gaddi, M. Gastal, M. Gateau, H. Gerwig, D. Gigi, K. Gill, D. Giordano, J.P. Girod, F. Glege, R. Gomez-Reino Garrido, R. Goudard, S. Gowdy, R. Guida, L. Guiducci, J. Gutleber, M. Hansen, C. Hartl, J. Harvey, B. Hegner, H.F. Hoffmann, A. Holzner, A. Honma, M. Huhtinen, V. Innocente, P. Janot, G. Le Godec, P. Lecoq, C. Leonidopoulos, R. Loos, C. Lourenço, A. Lyonnet, A. Macpherson, N. Magini, J.D. Maillefaud, G. Maire, T. Mäki, L. Malgeri, M. Mannelli, L. Masetti, F. Meijers, P. Meridiani, S. Mersi, E. Meschi, A. Meynet Cordonnier, R. Moser, M. Mulders, J. Mulon, M. Noy, A. Oh, G. Olesen, A. Onnela, T. Orimoto, L. Orsini, E. Perez, G. Perinic, J.F. Pernot, P. Petagna, P. Petiot, A. Petrilli, A. Pfeiffer, M. Pierini, M. Pimiä, R. Pintus, B. Pirollet, H. Postema, A. Racz, S. Ravat, S.B. Rew, J. Rodrigues Antunes, G. Rolandi[21], M. Rovere, V. Ryjov, H. Sakulin, D. Samyn, H. Sauce, C. Schäfer, W.D. Schlatter, M. Schröder, C. Schwick, A. Sciaba, I. Segoni, A. Sharma, N. Siegrist, P. Siegrist, N. Sinanis, T. Sobrier, P. Sphicas[22], D. Spiga, M. Spiropulu[17], F. Stöckli, P. Traczyk, P. Tropea, J. Troska, A. Tsirou, L. Veillet, G.I. Veres, M. Voutilainen, P. Wertelaers, M. Zanetti

**Paul Scherrer Institut, Villigen, Switzerland**
W. Bertl, K. Deiters, W. Erdmann, K. Gabathuler, R. Horisberger, Q. Ingram, H.C. Kaestli, S. König, D. Kotlinski, U. Langenegger, F. Meier, D. Renker, T. Rohe, J. Sibille[23], A. Starodumov[24]

**Institute for Particle Physics, ETH Zurich, Zurich, Switzerland**
B. Betev, L. Caminada[25], Z. Chen, S. Cittolin, D.R. Da Silva Di Calafiori, S. Dambach[25], G. Dissertori, M. Dittmar, C. Eggel[25], J. Eugster, G. Faber, K. Freudenreich, C. Grab, A. Hervé, W. Hintz, P. Lecomte, P.D. Luckey, W. Lustermann, C. Marchica[25], P. Milenovic[26], F. Moortgat, A. Nardulli, F. Nessi-Tedaldi, L. Pape, F. Pauss, T. Punz, A. Rizzi, F.J. Ronga, L. Sala, A.K. Sanchez, M.-C. Sawley, V. Sordini, B. Stieger, L. Tauscher[†], A. Thea, K. Theofilatos, D. Treille, P. Trüb[25], M. Weber, L. Wehrli, J. Weng, S. Zelepoukine[27]

2010 JINST 5 T03005

**Universität Zürich, Zurich, Switzerland**
C. Amsler, V. Chiochia, S. De Visscher, C. Regenfus, P. Robmann, T. Rommerskirchen, A. Schmidt, D. Tsirigkas, L. Wilke

**National Central University, Chung-Li, Taiwan**
Y.H. Chang, E.A. Chen, W.T. Chen, A. Go, C.M. Kuo, S.W. Li, W. Lin

**National Taiwan University (NTU), Taipei, Taiwan**
P. Bartalini, P. Chang, Y. Chao, K.F. Chen, W.-S. Hou, Y. Hsiung, Y.J. Lei, S.W. Lin, R.-S. Lu, J. Schümann, J.G. Shiu, Y.M. Tzeng, K. Ueno, Y. Velikzhanin, C.C. Wang, M. Wang

**Cukurova University, Adana, Turkey**
A. Adiguzel, A. Ayhan, A. Azman Gokce, M.N. Bakirci, S. Cerci, I. Dumanoglu, E. Eskut, S. Girgis, E. Gurpinar, I. Hos, T. Karaman, T. Karaman, A. Kayis Topaksu, P. Kurt, G. Önengüt, G. Önengüt Gökbulut, K. Ozdemir, S. Ozturk, A. Polatöz, K. Sogut[28], B. Tali, H. Topakli, D. Uzun, L.N. Vergili, M. Vergili

**Middle East Technical University, Physics Department, Ankara, Turkey**
I.V. Akin, T. Aliev, S. Bilmis, M. Deniz, H. Gamsizkan, A.M. Guler, K. Öcalan, M. Serin, R. Sever, U.E. Surat, M. Zeyrek

**Bogaziçi University, Department of Physics, Istanbul, Turkey**
M. Deliomeroglu, D. Demir[29], E. Gülmez, A. Halu, B. Isildak, M. Kaya[30], O. Kaya[30], S. Ozkorucuklu[31], N. Sonmez[32]

**National Scientific Center, Kharkov Institute of Physics and Technology, Kharkov, Ukraine**
L. Levchuk, S. Lukyanenko, D. Soroka, S. Zub

**University of Bristol, Bristol, United Kingdom**
F. Bostock, J.J. Brooke, T.L. Cheng, D. Cussans, R. Frazier, J. Goldstein, N. Grant, M. Hansen, G.P. Heath, H.F. Heath, C. Hill, B. Huckvale, J. Jackson, C.K. Mackay, S. Metson, D.M. Newbold[33], K. Nirunpong, V.J. Smith, J. Velthuis, R. Walton

**Rutherford Appleton Laboratory, Didcot, United Kingdom**
K.W. Bell, C. Brew, R.M. Brown, B. Camanzi, D.J.A. Cockerill, J.A. Coughlan, N.I. Geddes, K. Harder, S. Harper, B.W. Kennedy, P. Murray, C.H. Shepherd-Themistocleous, I.R. Tomalin, J.H. Williams[†], W.J. Womersley, S.D. Worm

**Imperial College, University of London, London, United Kingdom**
R. Bainbridge, G. Ball, J. Ballin, R. Beuselinck, O. Buchmuller, D. Colling, N. Cripps, G. Davies, M. Della Negra, C. Foudas, J. Fulcher, D. Futyan, G. Hall, J. Hays, G. Iles, G. Karapostoli, B.C. MacEvoy, A.-M. Magnan, J. Marrouche, J. Nash, A. Nikitenko[24], A. Papageorgiou, M. Pesaresi, K. Petridis, M. Pioppi[34], D.M. Raymond, N. Rompotis, A. Rose, M.J. Ryan, C. Seez, P. Sharp, G. Sidiropoulos[1], M. Stettler, M. Stoye, M. Takahashi, A. Tapper, C. Timlin, S. Tourneur, M. Vazquez Acosta, T. Virdee[1], S. Wakefield, D. Wardrope, T. Whyntie, M. Wingham

**Brunel University, Uxbridge, United Kingdom**
J.E. Cole, I. Goitom, P.R. Hobson, A. Khan, P. Kyberd, D. Leslie, C. Munro, I.D. Reid, C. Siamitros, R. Taylor, L. Teodorescu, I. Yaselli

2010 JINST 5 T03005

**Boston University, Boston, U.S.A.**
T. Bose, M. Carleton, E. Hazen, A.H. Heering, A. Heister, J. St. John, P. Lawson, D. Lazic, D. Osborne, J. Rohlf, L. Sulak, S. Wu

**Brown University, Providence, U.S.A.**
J. Andrea, A. Avetisyan, S. Bhattacharya, J.P. Chou, D. Cutts, S. Esen, G. Kukartsev, G. Landsberg, M. Narain, D. Nguyen, T. Speer, K.V. Tsang

**University of California, Davis, Davis, U.S.A.**
R. Breedon, M. Calderon De La Barca Sanchez, M. Case, D. Cebra, M. Chertok, J. Conway, P.T. Cox, J. Dolen, R. Erbacher, E. Friis, W. Ko, A. Kopecky, R. Lander, A. Lister, H. Liu, S. Maruyama, T. Miceli, M. Nikolic, D. Pellett, J. Robles, M. Searle, J. Smith, M. Squires, J. Stilley, M. Tripathi, R. Vasquez Sierra, C. Veelken

**University of California, Los Angeles, Los Angeles, U.S.A.**
V. Andreev, K. Arisaka, D. Cline, R. Cousins, S. Erhan[1], J. Hauser, M. Ignatenko, C. Jarvis, J. Mumford, C. Plager, G. Rakness, P. Schlein[†], J. Tucker, V. Valuev, R. Wallny, X. Yang

**University of California, Riverside, Riverside, U.S.A.**
J. Babb, M. Bose, A. Chandra, R. Clare, J.A. Ellison, J.W. Gary, G. Hanson, G.Y. Jeng, S.C. Kao, F. Liu, H. Liu, A. Luthra, H. Nguyen, G. Pasztor[35], A. Satpathy, B.C. Shen[†], R. Stringer, J. Sturdy, V. Sytnik, R. Wilken, S. Wimpenny

**University of California, San Diego, La Jolla, U.S.A.**
J.G. Branson, E. Dusinberre, D. Evans, F. Golf, R. Kelley, M. Lebourgeois, J. Letts, E. Lipeles, B. Mangano, J. Muelmenstaedt, M. Norman, S. Padhi, A. Petrucci, H. Pi, M. Pieri, R. Ranieri, M. Sani, V. Sharma, S. Simon, F. Würthwein, A. Yagil

**University of California, Santa Barbara, Santa Barbara, U.S.A.**
C. Campagnari, M. D'Alfonso, T. Danielson, J. Garberson, J. Incandela, C. Justus, P. Kalavase, S.A. Koay, D. Kovalskyi, V. Krutelyov, J. Lamb, S. Lowette, V. Pavlunin, F. Rebassoo, J. Ribnik, J. Richman, R. Rossin, D. Stuart, W. To, J.R. Vlimant, M. Witherell

**California Institute of Technology, Pasadena, U.S.A.**
A. Apresyan, A. Bornheim, J. Bunn, M. Chiorboli, M. Gataullin, D. Kcira, V. Litvine, Y. Ma, H.B. Newman, C. Rogan, V. Timciuc, J. Veverka, R. Wilkinson, Y. Yang, L. Zhang, K. Zhu, R.Y. Zhu

**Carnegie Mellon University, Pittsburgh, U.S.A.**
B. Akgun, R. Carroll, T. Ferguson, D.W. Jang, S.Y. Jun, M. Paulini, J. Russ, N. Terentyev, H. Vogel, I. Vorobiev

**University of Colorado at Boulder, Boulder, U.S.A.**
J.P. Cumalat, M.E. Dinardo, B.R. Drell, W.T. Ford, B. Heyburn, E. Luiggi Lopez, U. Nauenberg, K. Stenson, K. Ulmer, S.R. Wagner, S.L. Zang

**Cornell University, Ithaca, U.S.A.**
L. Agostino, J. Alexander, F. Blekman, D. Cassel, A. Chatterjee, S. Das, L.K. Gibbons, B. Heltsley, W. Hopkins, A. Khukhunaishvili, B. Kreis, V. Kuznetsov, J.R. Patterson, D. Puigh, A. Ryd, X. Shi, S. Stroiney, W. Sun, W.D. Teo, J. Thom, J. Vaughan, Y. Weng, P. Wittich

2010 JINST 5 T03005

**Fairfield University, Fairfield, U.S.A.**
C.P. Beetz, G. Cirino, C. Sanzeni, D. Winn

**Fermi National Accelerator Laboratory, Batavia, U.S.A.**
S. Abdullin, M.A. Afaq[1], M. Albrow, B. Ananthan, G. Apollinari, M. Atac, W. Badgett, L. Bagby, J.A. Bakken, B. Baldin, S. Banerjee, K. Banicz, L.A.T. Bauerdick, A. Beretvas, J. Berryhill, P.C. Bhat, K. Biery, M. Binkley, I. Bloch, F. Borcherding, A.M. Brett, K. Burkett, J.N. Butler, V. Chetluru, H.W.K. Cheung, F. Chlebana, I. Churin, S. Cihangir, M. Crawford, W. Dagenhart, M. Demarteau, G. Derylo, D. Dykstra, D.P. Eartly, J.E. Elias, V.D. Elvira, D. Evans, L. Feng, M. Fischler, I. Fisk, S. Foulkes, J. Freeman, P. Gartung, E. Gottschalk, T. Grassi, D. Green, Y. Guo, O. Gutsche, A. Hahn, J. Hanlon, R.M. Harris, B. Holzman, J. Howell, D. Hufnagel, E. James, H. Jensen, M. Johnson, C.D. Jones, U. Joshi, E. Juska, J. Kaiser, B. Klima, S. Kossiakov, K. Kousouris, S. Kwan, C.M. Lei, P. Limon, J.A. Lopez Perez, S. Los, L. Lueking, G. Lukhanin, S. Lusin[1], J. Lykken, K. Maeshima, J.M. Marraffino, D. Mason, P. McBride, T. Miao, K. Mishra, S. Moccia, R. Mommsen, S. Mrenna, A.S. Muhammad, C. Newman-Holmes, C. Noeding, V. O'Dell, O. Prokofyev, R. Rivera, C.H. Rivetta, A. Ronzhin, P. Rossman, S. Ryu, V. Sekhri, E. Sexton-Kennedy, I. Sfiligoi, S. Sharma, T.M. Shaw, D. Shpakov, E. Skup, R.P. Smith[†], A. Soha, W.J. Spalding, L. Spiegel, I. Suzuki, P. Tan, W. Tanenbaum, S. Tkaczyk[1], R. Trentadue[1], L. Uplegger, E.W. Vaandering, R. Vidal, J. Whitmore, E. Wicklund, W. Wu, J. Yarba, F. Yumiceva, J.C. Yun

**University of Florida, Gainesville, U.S.A.**
D. Acosta, P. Avery, V. Barashko, D. Bourilkov, M. Chen, G.P. Di Giovanni, D. Dobur, A. Drozdetskiy, R.D. Field, Y. Fu, I.K. Furic, J. Gartner, D. Holmes, B. Kim, S. Klimenko, J. Konigsberg, A. Korytov, K. Kotov, A. Kropivnitskaya, T. Kypreos, A. Madorsky, K. Matchev, G. Mitselmakher, Y. Pakhotin, J. Piedra Gomez, C. Prescott, V. Rapsevicius, R. Remington, M. Schmitt, B. Scurlock, D. Wang, J. Yelton

**Florida International University, Miami, U.S.A.**
C. Ceron, V. Gaultney, L. Kramer, L.M. Lebolo, S. Linn, P. Markowitz, G. Martinez, J.L. Rodriguez

**Florida State University, Tallahassee, U.S.A.**
T. Adams, A. Askew, H. Baer, M. Bertoldi, J. Chen, W.G.D. Dharmaratna, S.V. Gleyzer, J. Haas, S. Hagopian, V. Hagopian, M. Jenkins, K.F. Johnson, E. Prettner, H. Prosper, S. Sekmen

**Florida Institute of Technology, Melbourne, U.S.A.**
M.M. Baarmand, S. Guragain, M. Hohlmann, H. Kalakhety, H. Mermerkaya, R. Ralich, I. Vodopiyanov

**University of Illinois at Chicago (UIC), Chicago, U.S.A.**
B. Abelev, M.R. Adams, I.M. Anghel, L. Apanasevich, V.E. Bazterra, R.R. Betts, J. Callner, M.A. Castro, R. Cavanaugh, C. Dragoiu, E.J. Garcia-Solis, C.E. Gerber, D.J. Hofman, S. Khalatian, C. Mironov, E. Shabalina, A. Smoron, N. Varelas

**The University of Iowa, Iowa City, U.S.A.**
U. Akgun, E.A. Albayrak, A.S. Ayan, B. Bilki, R. Briggs, K. Cankocak[36], K. Chung, W. Clarida, P. Debbins, F. Duru, F.D. Ingram, C.K. Lae, E. McCliment, J.-P. Merlo, A. Mestvirishvili, M.J. Miller, A. Moeller, J. Nachtman, C.R. Newsom, E. Norbeck, J. Olson, Y. Onel, F. Ozok, J. Parsons, I. Schmidt, S. Sen, J. Wetzel, T. Yetkin, K. Yi

2010 JINST 5 T03005

**Johns Hopkins University, Baltimore, U.S.A.**
B.A. Barnett, B. Blumenfeld, A. Bonato, C.Y. Chien, D. Fehling, G. Giurgiu, A.V. Gritsan, Z.J. Guo, P. Maksimovic, S. Rappoccio, M. Swartz, N.V. Tran, Y. Zhang

**The University of Kansas, Lawrence, U.S.A.**
P. Baringer, A. Bean, O. Grachov, M. Murray, V. Radicci, S. Sanders, J.S. Wood, V. Zhukova

**Kansas State University, Manhattan, U.S.A.**
D. Bandurin, T. Bolton, K. Kaadze, A. Liu, Y. Maravin, D. Onoprienko, I. Svintradze, Z. Wan

**Lawrence Livermore National Laboratory, Livermore, U.S.A.**
J. Gronberg, J. Hollar, D. Lange, D. Wright

**University of Maryland, College Park, U.S.A.**
D. Baden, R. Bard, M. Boutemeur, S.C. Eno, D. Ferencek, N.J. Hadley, R.G. Kellogg, M. Kirn, S. Kunori, K. Rossato, P. Rumerio, F. Santanastasio, A. Skuja, J. Temple, M.B. Tonjes, S.C. Tonwar, T. Toole, E. Twedt

**Massachusetts Institute of Technology, Cambridge, U.S.A.**
B. Alver, G. Bauer, J. Bendavid, W. Busza, E. Butz, I.A. Cali, M. Chan, D. D'Enterria, P. Everaerts, G. Gomez Ceballos, K.A. Hahn, P. Harris, S. Jaditz, Y. Kim, M. Klute, Y.-J. Lee, W. Li, C. Loizides, T. Ma, M. Miller, S. Nahn, C. Paus, C. Roland, G. Roland, M. Rudolph, G. Stephans, K. Sumorok, K. Sung, S. Vaurynovich, E.A. Wenger, B. Wyslouch, S. Xie, Y. Yilmaz, A.S. Yoon

**University of Minnesota, Minneapolis, U.S.A.**
D. Bailleux, S.I. Cooper, P. Cushman, B. Dahmes, A. De Benedetti, A. Dolgopolov, P.R. Dudero, R. Egeland, G. Franzoni, J. Haupt, A. Inyakin[37], K. Klapoetke, Y. Kubota, J. Mans, N. Mirman, D. Petyt, V. Rekovic, R. Rusack, M. Schroeder, A. Singovsky, J. Zhang

**University of Mississippi, University, U.S.A.**
L.M. Cremaldi, R. Godang, R. Kroeger, L. Perera, R. Rahmat, D.A. Sanders, P. Sonnek, D. Summers

**University of Nebraska-Lincoln, Lincoln, U.S.A.**
K. Bloom, B. Bockelman, S. Bose, J. Butt, D.R. Claes, A. Dominguez, M. Eads, J. Keller, T. Kelly, I. Kravchenko, J. Lazo-Flores, C. Lundstedt, H. Malbouisson, S. Malik, G.R. Snow

**State University of New York at Buffalo, Buffalo, U.S.A.**
U. Baur, I. Iashvili, A. Kharchilava, A. Kumar, K. Smith, M. Strang

**Northeastern University, Boston, U.S.A.**
G. Alverson, E. Barberis, O. Boeriu, G. Eulisse, G. Govi, T. McCauley, Y. Musienko[38], S. Muzaffar, I. Osborne, T. Paul, S. Reucroft, J. Swain, L. Taylor, L. Tuura

**Northwestern University, Evanston, U.S.A.**
A. Anastassov, B. Gobbi, A. Kubik, R.A. Ofierzynski, A. Pozdnyakov, M. Schmitt, S. Stoynev, M. Velasco, S. Won

**University of Notre Dame, Notre Dame, U.S.A.**
L. Antonelli, D. Berry, M. Hildreth, C. Jessop, D.J. Karmgard, T. Kolberg, K. Lannon, S. Lynch, N. Marinelli, D.M. Morse, R. Ruchti, J. Slaunwhite, J. Warchol, M. Wayne

2010 JINST 5 T03005

**The Ohio State University, Columbus, U.S.A.**
B. Bylsma, L.S. Durkin, J. Gilmore[39], J. Gu, P. Killewald, T.Y. Ling, G. Williams

**Princeton University, Princeton, U.S.A.**
N. Adam, E. Berry, P. Elmer, A. Garmash, D. Gerbaudo, V. Halyo, A. Hunt, J. Jones, E. Laird, D. Marlow, T. Medvedeva, M. Mooney, J. Olsen, P. Piroué, D. Stickland, C. Tully, J.S. Werner, T. Wildish, Z. Xie, A. Zuranski

**University of Puerto Rico, Mayaguez, U.S.A.**
J.G. Acosta, M. Bonnett Del Alamo, X.T. Huang, A. Lopez, H. Mendez, S. Oliveros, J.E. Ramirez Vargas, N. Santacruz, A. Zatzerklyany

**Purdue University, West Lafayette, U.S.A.**
E. Alagoz, E. Antillon, V.E. Barnes, G. Bolla, D. Bortoletto, A. Everett, A.F. Garfinkel, Z. Gecse, L. Gutay, N. Ippolito, M. Jones, O. Koybasi, A.T. Laasanen, N. Leonardo, C. Liu, V. Maroussov, P. Merkel, D.H. Miller, N. Neumeister, A. Sedov, I. Shipsey, H.D. Yoo, Y. Zheng

**Purdue University Calumet, Hammond, U.S.A.**
P. Jindal, N. Parashar

**Rice University, Houston, U.S.A.**
V. Cuplov, K.M. Ecklund, F.J.M. Geurts, J.H. Liu, D. Maronde, M. Matveev, B.P. Padley, R. Redjimi, J. Roberts, L. Sabbatini, A. Tumanov

**University of Rochester, Rochester, U.S.A.**
B. Betchart, A. Bodek, H. Budd, Y.S. Chung, P. de Barbaro, R. Demina, H. Flacher, Y. Gotra, A. Harel, S. Korjenevski, D.C. Miner, D. Orbaker, G. Petrillo, D. Vishnevskiy, M. Zielinski

**The Rockefeller University, New York, U.S.A.**
A. Bhatti, L. Demortier, K. Goulianos, K. Hatakeyama, G. Lungu, C. Mesropian, M. Yan

**Rutgers, the State University of New Jersey, Piscataway, U.S.A.**
O. Atramentov, E. Bartz, Y. Gershtein, E. Halkiadakis, D. Hits, A. Lath, K. Rose, S. Schnetzer, S. Somalwar, R. Stone, S. Thomas, T.L. Watts

**University of Tennessee, Knoxville, U.S.A.**
G. Cerizza, M. Hollingsworth, S. Spanier, Z.C. Yang, A. York

**Texas A&M University, College Station, U.S.A.**
J. Asaadi, A. Aurisano, R. Eusebi, A. Golyash, A. Gurrola, T. Kamon, C.N. Nguyen, J. Pivarski, A. Safonov, S. Sengupta, D. Toback, M. Weinberger

**Texas Tech University, Lubbock, U.S.A.**
N. Akchurin, L. Berntzon, K. Gumus, C. Jeong, H. Kim, S.W. Lee, S. Popescu, Y. Roh, A. Sill, I. Volobouev, E. Washington, R. Wigmans, E. Yazgan

**Vanderbilt University, Nashville, U.S.A.**
D. Engh, C. Florez, W. Johns, S. Pathak, P. Sheldon

**University of Virginia, Charlottesville, U.S.A.**
D. Andelin, M.W. Arenton, M. Balazs, S. Boutle, M. Buehler, S. Conetti, B. Cox, R. Hirosky, A. Ledovskoy, C. Neu, D. Phillips II, M. Ronquest, R. Yohay

2010 JINST 5 T03005

**Wayne State University, Detroit, U.S.A.**
S. Gollapinni, K. Gunthoti, R. Harr, P.E. Karchin, M. Mattson, A. Sakharov

**University of Wisconsin, Madison, U.S.A.**
M. Anderson, M. Bachtis, J.N. Bellinger, D. Carlsmith, I. Crotty[1], S. Dasu, S. Dutta, J. Efron, F. Feyzi, K. Flood, L. Gray, K.S. Grogg, M. Grothe, R. Hall-Wilton[1], M. Jaworski, P. Klabbers, J. Klukas, A. Lanaro, C. Lazaridis, J. Leonard, R. Loveless, M. Magrans de Abril, A. Mohapatra, G. Ott, G. Polese, D. Reeder, A. Savin, W.H. Smith, A. Sourkov[40], J. Swanson, M. Weinberg, D. Wenman, M. Wensveen, A. White

†: Deceased
1: Also at CERN, European Organization for Nuclear Research, Geneva, Switzerland
2: Also at Universidade Federal do ABC, Santo Andre, Brazil
3: Also at Soltan Institute for Nuclear Studies, Warsaw, Poland
4: Also at Université de Haute-Alsace, Mulhouse, France
5: Also at Centre de Calcul de l'Institut National de Physique Nucleaire et de Physique des Particules (IN2P3), Villeurbanne, France
6: Also at Moscow State University, Moscow, Russia
7: Also at Institute of Nuclear Research ATOMKI, Debrecen, Hungary
8: Also at University of California, San Diego, La Jolla, U.S.A.
9: Also at Tata Institute of Fundamental Research - HECR, Mumbai, India
10: Also at University of Visva-Bharati, Santiniketan, India
11: Also at Facolta' Ingegneria Universita' di Roma "La Sapienza", Roma, Italy
12: Also at Università della Basilicata, Potenza, Italy
13: Also at Laboratori Nazionali di Legnaro dell' INFN, Legnaro, Italy
14: Also at Università di Trento, Trento, Italy
15: Also at ENEA - Casaccia Research Center, S. Maria di Galeria, Italy
16: Also at Warsaw University of Technology, Institute of Electronic Systems, Warsaw, Poland
17: Also at California Institute of Technology, Pasadena, U.S.A.
18: Also at Faculty of Physics of University of Belgrade, Belgrade, Serbia
19: Also at Laboratoire Leprince-Ringuet, Ecole Polytechnique, IN2P3-CNRS, Palaiseau, France
20: Also at Alstom Contracting, Geneve, Switzerland
21: Also at Scuola Normale e Sezione dell' INFN, Pisa, Italy
22: Also at University of Athens, Athens, Greece
23: Also at The University of Kansas, Lawrence, U.S.A.
24: Also at Institute for Theoretical and Experimental Physics, Moscow, Russia
25: Also at Paul Scherrer Institut, Villigen, Switzerland
26: Also at Vinca Institute of Nuclear Sciences, Belgrade, Serbia
27: Also at University of Wisconsin, Madison, U.S.A.
28: Also at Mersin University, Mersin, Turkey
29: Also at Izmir Institute of Technology, Izmir, Turkey
30: Also at Kafkas University, Kars, Turkey
31: Also at Suleyman Demirel University, Isparta, Turkey
32: Also at Ege University, Izmir, Turkey

2010 JINST 5 T03005

33: Also at Rutherford Appleton Laboratory, Didcot, United Kingdom
34: Also at INFN Sezione di Perugia; Universita di Perugia, Perugia, Italy
35: Also at KFKI Research Institute for Particle and Nuclear Physics, Budapest, Hungary
36: Also at Istanbul Technical University, Istanbul, Turkey
37: Also at University of Minnesota, Minneapolis, U.S.A.
38: Also at Institute for Nuclear Research, Moscow, Russia
39: Also at Texas A&M University, College Station, U.S.A.
40: Also at State Research Center of Russian Federation, Institute for High Energy Physics, Protvino, Russia

2010 JINST 5 T03005