Purdue University
Purdue e-Pubs

International Compressor Engineering Conference | School of Mechanical Engineering

2010

Simulation and Development of Trans-critical CO2 Rolling Piston Compressor

Yunfeng Chang
Xi'an Jiaotong University

Bin He
Xi'an Jiaotong University

Xin Yang
Xi'an Jiaotong University

Youngchan Ma
Ingersoll Rand Climate Solutions/Thermo King

Follow this and additional works at: http://docs.lib.purdue.edu/icec

Chang, Yunfeng; He, Bin; Yang, Xin; and Ma, Youngchan, "Simulation and Development of Trans-critical CO2 Rolling Piston Compressor" (2010). *International Compressor Engineering Conference*. Paper 1973.
http://docs.lib.purdue.edu/icec/1973

This document has been made available through Purdue e-Pubs, a service of the Purdue University Libraries. Please contact epubs@purdue.edu for additional information.
Complete proceedings may be acquired in print and on CD-ROM directly from the Ray W. Herrick Laboratories at https://engineering.purdue.edu/Herrick/Events/orderlit.html

Simulation and Development of Trans-critical CO_2 Rolling Piston Compressor

Yunfeng Chang[1], Bin He[1], Xin Yang[1*], Youngchan Ma[2]
[1]Compressor Institution, Xi'an Jiaotong University,
Xi'an, Shaanxi, China
Phone: 86-13891873580
Email: xinyang3721@gmail.com
[2]Ingersoll Rand Climate Solutions, Thermo King,
Minneapolis, Minnesota, USA.
Phone: 952-887-2526

ABSTRACT

Environmentally speaking, of assorted widely-used refrigeration systems, the trans-critical CO_2 system is one of the potential competitors. In this research, a horizontal semi-hermetic rolling piston compressor is developed for trans-critical CO_2 cycle. This paper also presents a series of mathematical simulation models to identify the main factors influencing compressor's performance. Based upon conclusions of this simulation, it puts forward several methods for improving design of trans-critical CO_2 rolling piston compressor.

1. INTRODUCTION

As a kind of natural refrigerants, CO_2, due to its environmentally beneficial, non-toxic and non-combustible characters as well as superior physical properties, has re-aroused extensive concerns. Trans-critical cycle using CO_2 as refrigerant is firstly put forward by Lorentzen G (1994). The main components of this closed cycle includes a compressor, a gas cooler, a regenerator, a throttle valve, an evaporator and a liquid container. A two-stage hermetic CO_2 rolling piston compressor for heat pump application is developed by Masaya Tadano, et al. (2000). Haruhisa Yamasaki, et al. (2004), optimizes their former design by guiding 1st stage discharge into shell of compressor which superiorly cools the motor. Ooi KT(2007)elaborately set up mathematical models for single stage CO_2 rolling piston compressor, and conducts experiments and leakage analysis.

In trans-critical CO_2 cycle, discharge pressure reaches such a high level that leakage, discharge valve and strength of compressor components become the major factors impinging its performance. In this paper, mathematical models for two-stage trans-critical CO_2 rolling piston compressor are developed to simulate its working process. With a consideration of primitive volume variation and valve motion, effect of leakage clearance and flow area of discharge valve on compressor's performance are concluded through this simulation. According to the results, the optimal methods of improving design of two-stage CO_2 rolling piston compressor for trans-critical cycle are put forward.

2. DEVELOPMENT OF PROTOTYPE COMPRESSOR

In this research, a trans-critical CO2 rolling piston prototype compressor is development in horizontal arrangement satisfying requirements on weight, reliability, efficiency and installation.

The compressor's structure is depicted in Figure 1. In this configuration, CO2, after compressed in the 1st stage, goes into compressor shell directly through discharge valve of 1st stage to cool down the motor. CO_2 goes through intercooler before suction port of the 2nd stage to decrease suction superheat of the 2nd stage. Finally, high-temperature and high-pressure gas after the 2nd stage compression runs out of the compressor though the 2nd-stage discharge valve.

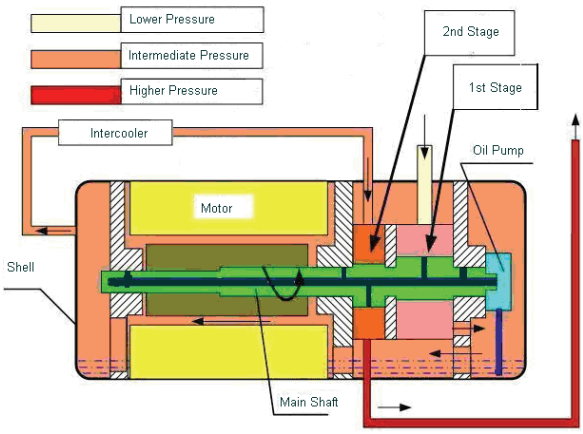

Figure 1: Structure of designed Trans-critical CO_2 Rolling Piston Compressor

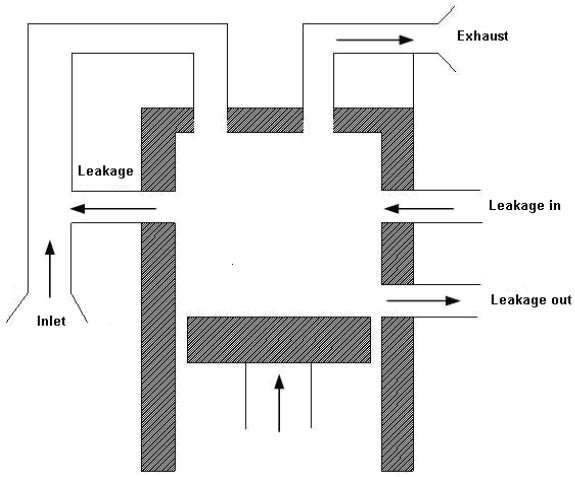

Figure 2: Model of compression chamber

3. SIMULATION OF TRANS-CRITICAL CO_2 ROLLING PISTON COMPRESSOR

3.1 Analysis of Physical Model

For the convenience of simulating the working process of above compressor, minor factors are simplified and omitted. The fundamental assumption is as follows:

1) any two points in primitive volume are of the same state- the same temperature, pressure, density, enthalpy, entropy etc;
2) any external effect (the exchange of mechanical energy, heat energy and mass) works on the gas point in primitive volume instantaneously;
3) the flow into and out of primitive volume is regarded as steady adiabatic flow, and simulation of heat transfer procedure of compressor will not be taken into account;
4) gas pulse in the suction and discharge chamber is not taken into consideration and the gas pressure and temperature in chamber are constant, and equal to nominal discharge pressure and temperature respectively;
5) flow through suction and discharge orifice and leakage gap is adiabatic steady flow, neglecting the kinetic and potential energy;
6) oil droplets have no phase transition and are incompressible.

According thermodynamic theory of variable mass system and adopted volume control analysis method, thermodynamic model of the compressor's working process could be set as Figure 2. Compression chamber is the control volume in this analysis. All the fluid flowing through inlet, outlet and clearance could be recognized as mass exchange between external and control volume

3.2 Governing Equations

3.2.1 Energy equations of the compression chamber: energy equations of suction stroke, compression stroke and discharge stroke in compression chamber are uniformly described in Equation (1) and (2):

$$\frac{dT_c}{dt}=\frac{1}{\left(\frac{\partial h_c}{\partial T_c}\right)_\rho-\frac{1}{\rho_c}\left(\frac{\partial p_c}{\partial T_c}\right)_\rho}\cdot\left\{\begin{array}{l}\frac{1}{m_c}\left[\frac{dm_s}{dt}h_s-\frac{dm_d}{dt}h_c-\frac{dm_l}{dt}h_c-\frac{dm_c}{dt}h_c+\frac{dQ}{dt}\right]\\+\left[\frac{1}{\rho_c}\left(\frac{\partial p_c}{\partial \rho_c}\right)_T-\left(\frac{\partial h_c}{\partial \rho_c}\right)_T\right]\frac{d\rho_c}{dt}\end{array}\right\} \tag{1}$$

$$\frac{dp_c}{dt}=\frac{\frac{1}{\rho_c}\left[\left(\frac{\partial h_c}{\partial \rho_c}\right)_T-\left(\frac{\partial h_c}{\partial T_c}\right)_\rho\frac{\left(\frac{\partial p_c}{\partial \rho_c}\right)_T}{\left(\frac{\partial p_c}{\partial T_c}\right)_\rho}\right]}{1-\frac{\left(\frac{\partial h_c}{\partial T_c}\right)_\rho}{\rho_c\left(\frac{\partial p_c}{\partial T_c}\right)_\rho}}\cdot\frac{d\rho_c}{dt}-\frac{\frac{1}{V_c}\left[\frac{dm_s}{dt}(h_s-h_c)+\frac{dQ}{dt}\right]}{1-\frac{\left(\frac{\partial h_c}{\partial T_c}\right)_\rho}{\rho_c\left(\frac{\partial p_c}{\partial T_c}\right)_\rho}} \tag{2}$$

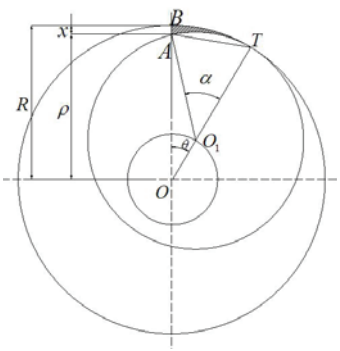

Figure 3: Volume variation in compression chamber

3.2.2 Equations of primitive volume variation: As is depicted in the Figure 3, shaded part A_S is the sectional area of the suction volume, which is listed in Equation (3).

$$A_s=0.5R^2\theta-0.5r^2\alpha-0.5re\sin\alpha \tag{3}$$

Where: $O_1A=r$, $OA=\rho$, $\mu=e/r$, $\varepsilon=e/R$, l is height of compression chamber.

Suction volume is listed in Equation (4).

$$V_s=A_s l \tag{4}$$

Compression and discharge volume is listed in Equation (5).

$$\frac{dV_c}{d\theta}=\begin{cases} -0.5R^2+\dfrac{0.5r^2}{\sqrt{r^2-(\rho\sin\theta)^2}}\left(\sin\theta\dfrac{d\rho}{d\theta}+\rho\cos\theta\right)+0.5e\left(\sin\theta\dfrac{d\rho}{d\theta}+\rho\cos\theta\right), \\ 0\le\theta<\theta_1\cup\theta_2\le\theta\le 2\pi \\ -0.5R^2-\dfrac{0.5r^2}{\sqrt{r^2-(\rho\sin\theta)^2}}\left(\sin\theta\dfrac{d\rho}{d\theta}+\rho\cos\theta\right)+0.5e\left(\sin\theta\dfrac{d\rho}{d\theta}+\rho\cos\theta\right),\theta_1\le\theta<\theta_2 \end{cases} \tag{5}$$

Where: $\theta_1=0.5\arccos\left(\dfrac{\mu^2-1}{\mu^2+1}\right),\theta_2=2\pi-0.5\arccos\left(\dfrac{\mu^2-1}{\mu^2+1}\right)$

3.2.3 State equation of working fluid: To calculate the parameters of working fluid Pent-Robison equation is adopted as Equation (6).

$$p=\frac{RT}{v-b}-\frac{a(T)}{v(v+b)+b(v-b)} \tag{6}$$

3.2.4 Motion equation of discharge valve:

As is shown in Figure 4, by neglecting the effect of viscosity and friction, a single degree of freedom motion equation is given in Equation (7) (Zhang JQ, 2008).

$$\frac{d^2y}{dt^2}=\frac{1}{M_v}\left[\beta\left(p_1A_1-p_2A_2\right)-ZK\left(Y_0+y\right)\right] \tag{7}$$

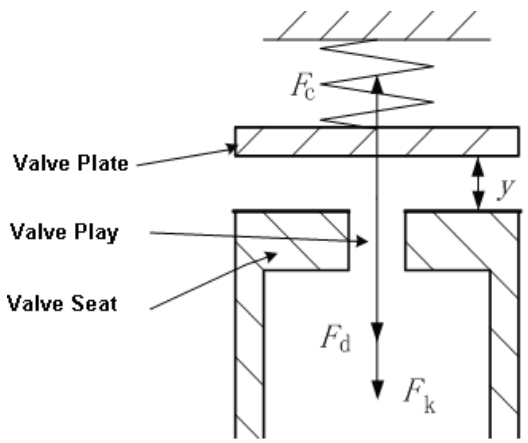

Figure 4: Force analysis of discharge valve

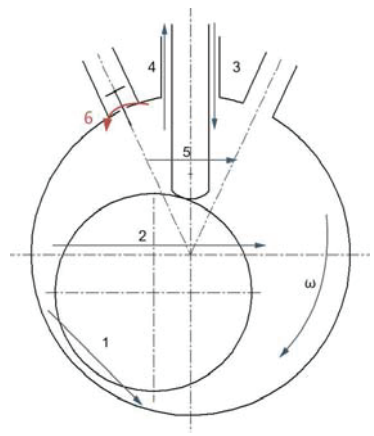

Figure 5: Leakage paths

3.2.5: Mass exchange equation: Oil-gas mixture flowing into the primitive volume includes dm_s through inlet and dm_{l1} through the leakage clearance. Oil-gas mixture flowing out of the primitive volume includes dm_d through discharge and dm_{l2} through the leakage clearance. Therefore, mass exchange equation in primitive volume is given in Equation (8).

$$\frac{dm_c}{dt}=\frac{dm_s}{dt}-\frac{dm_d}{dt}-\sum\frac{dm_l}{dt} \tag{8}$$

Where: mass flow through inlet (dm_s) and outlet (dm_d) is defined by orifice model, and leakage (dm_l) both flowing into and out of primitive volume is defined by plate model.

Six leakage paths are considered in Figure 5: ① radial clearance between piston and cylinder; ② clearance between piston face and cylinder head; ③ clearance between sliding vane and chute

(connecting discharge and chamber); ④ clearance between sliding vane and chute (connecting inlet and chamber); ⑤ clearance between sliding vane and cylinder face; ⑥ clearance between discharge valve and piston.

4. RESULT AND COMPRESSOR ANALYSIS

4.1 Effect of Discharge Valve Outlet Flow Area on Compressor's Performance

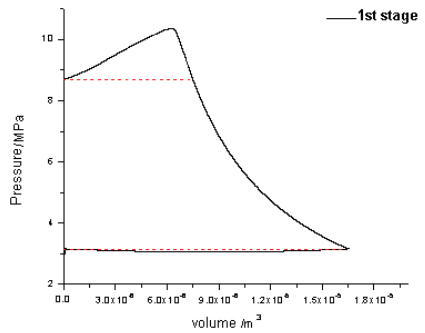

Figure 6: P-V diagram of 1st stage before enlargemen

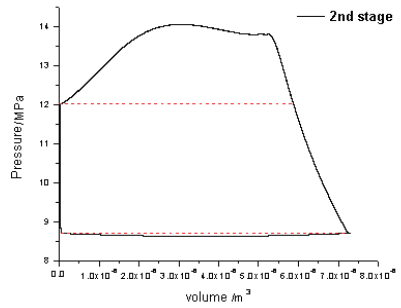

Figure 7: The P-V diagram of 2nd stage before enlargement

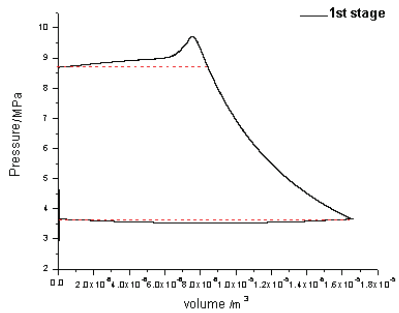

Figure 8: The P-V diagram of 1st stage after enlargement

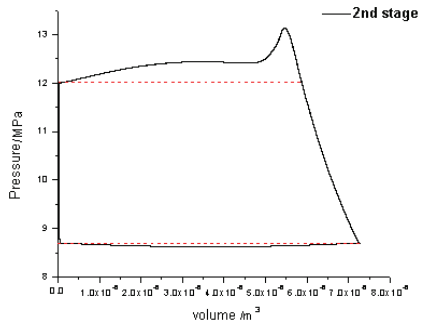

Figure 9: The P-V diagram of 2nd stage after enlargement

Prototype compressor is designed where discharge pressures are 8.7MPa and 12MPa for 1st and 2nd stage. However, as is revealed in Figure 6 and Figure 7, when the diameter of discharge valve's flow area is 3mm, the maximum discharge pressure is 10MPa and 14MPa, and discharge energy loss of lower and higher pressure stages are 24.5% and 37.5% of the total indicated power. This would harm both volumetric and adiabatic efficiencies of prototype compressor. According to Figure8 and Figure 9, a 4mm diameter of discharge valve's flow area could assure an obvious improvement. Discharge energy loss of lower and higher pressure stages are reduced to 9.2% and 13.3%. Indicated power of each stage declines to 7.3% and 21.8%, and adiabatic efficiencies increase from 84% and 68.4% to 91.7% and 87.8%. Therefore, the diameter of discharge valve' flow area significantly influences compressor's performance.

4.2 Effect of Leakage Clearance on Compressor's Efficiency

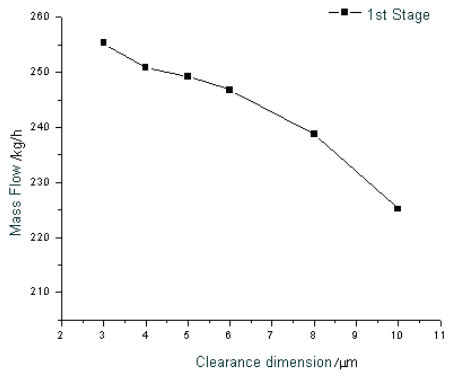

Figure 10: Mass flow of 1st stage under different leakage clearance dimensions

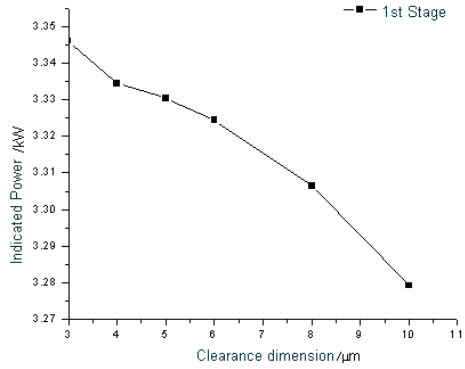

Figure 11: Indicated power of 1st stage under different leakage clearance dimensions

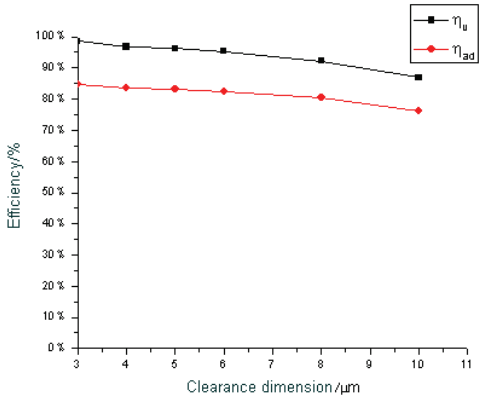

Figure 12: Volumetric and adiabatic efficiencies of 1st stage under different leakage clearance dimensions

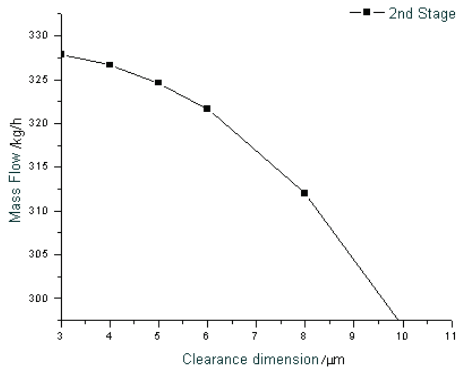

Figure 13: Mass flow of 2nd stage under different leakage clearance dimensions

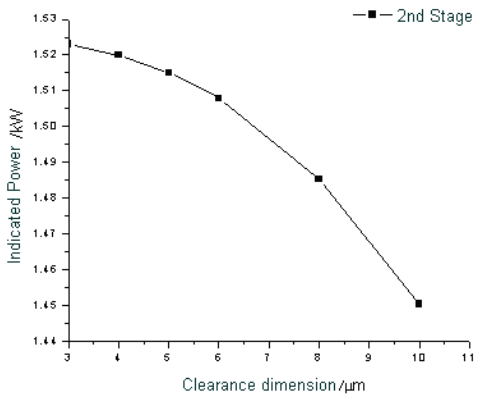

Figure 14: Indicated power of 2nd stage under different leakage clearance dimensions

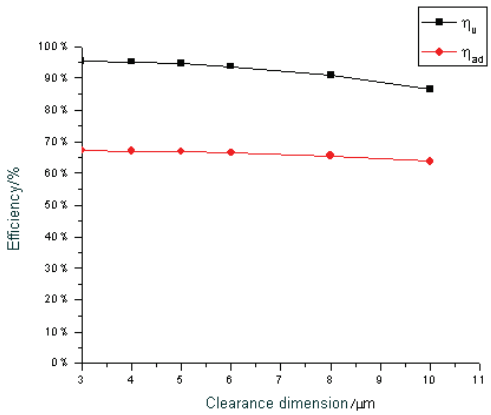

Figure 15: Volumetric and adiabatic efficiencies of 2nd stage under different leakage clearance dimensions

The leakage of CO_2 in compressor is directly determined by clearance dimension of leakage paths.

Under design conditions, all the leakage clearance dimensions are uniformly set to be 3μm, 4μm, 5μm, 6μm, 8μm and 10μm for simplifying compressor simulation.

As is depicted in Figure 10~Figure 15, indicated power and mass flow of each stage of the CO_2 compressor obviously diminish according with increasing clearance dimension, because increasing clearance dimension is capable to aggravate leakage of CO_2 and lubricating oil. However, due to the high rotational speed of motor, volumetric and adiabatic efficiencies of this compressor decrease slightly. Therefore, appropriately reducing clearance dimension of leakage paths could effectively improve compressor's performance.

Figure 16 and Figure 17 are the cumulative leakages of 1st and 2nd stage in one complete stroke. Positive and negative leakage values respectively represent working fluid leaking into and out of compression chamber. As is depicted in Figure 16, in lower pressure stage, more mixture of CO_2 and lubricating oil leaks into compression chamber through 3rd and 4th leakage paths (clearances between sliding vane and chute) than any others. As in Figure 17, in higher pressure stage, 4th (clearance between sliding vane and chute connecting inlet and chamber) and 6th (clearance between discharge valve and piston) leakage paths are the most serious channels through which most working fluid leaks out of compression chamber. Through other leakage paths, little working fluid could leak into or out of compression chamber and seriously decrease compressor's performance. Therefore, in order to optimize design of prototype compressor to enhance its performance, the clearance between sliding vane and chute, as well as the clearance between discharge valve and piston, should be diminished. Other leakage paths should not be required to be over-precisely processed and manufactured, as long as their tolerance and fit are guaranteed. From the analysis above, minimizing clearance dimension of 3rd, 4th and 6th leakage paths would be the most important method of improving compressor's performance.

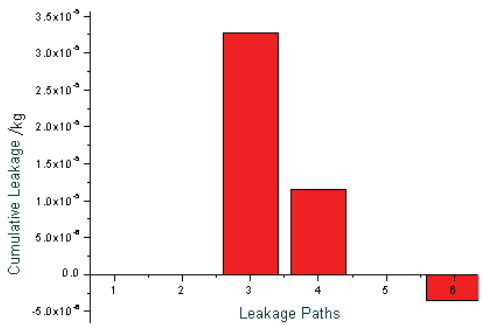

Figure 16: Cumulative leakage of 1st stage in one cycle

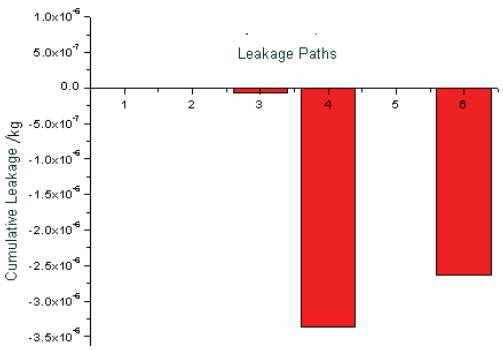

Figure 17: Cumulative leakage of 2nd stage in one cycle

5. CONCLUSIONS

This paper analyzes procedure of compression and major factors that effect compressor's performance. In this simulation, primitive volume variation and leakage clearance dimension are considered according to compressor's working process; a dynamic model for discharge valve is developed. Therefore, newly developed model enables more precise simulating results.

According to the simulation of prototype compressor, the 3rd and 4th leakage paths of 1st compression stage and 4th and 6th leakage paths of 2nd compression stage significantly influence CO_2 rolling piston compressor's performance. Minimizing clearance dimensions of these paths could effectively increase its capability. However, decreasing clearance dimensions of other clearance would contribute little for optimization.

Flow resistance of discharge valve, rather than any other factors, plays important role in augment of indicated power. Appropriate enlargement of diameter of discharge valve's outlet could obviously improve adiabatic efficiency of this trans-critical CO_2 rolling piston compressor.

NOMENCLATURE

K	spring stiffness	N/m
M_v	mass of valve plate	(g)
Q	heat transfer quantity	(J)
T	temperature	(K)
V	volume	(m^3)
Y_0	preload position of valve plate	(m)
Z	number of spring	
h	enthalpy	(kJ/kg)
m	mass	(g)
p	pressure	(Pa)
t	time	(s)
v	specific volume	(kg/m^3)
y	valve plate lift	(m)
β	thrust co-efficiency	
η_{ad}	adiabatic efficiency	
η_v	volumetric efficiency	
ρ	density	(kg/m^3)

Subscripts

ad	isentropic process
c	state in the compression chamber
s	suction
d	discharge
l	leakage
1	valve inlet
2	valve outlet

REFERENCES

Lorentzen G, 1994, Revival of carbon dioxide as a refrigeran. *Int. J. of Refrigeration*, vol. 17, no 5: P. 292-301.

Tadano M, Ebara T, Oda A, et al, 2000, Development of the CO_2 hermetic compressor. *Proc. ICEC,* Purdue, USA.

Yamasaki H, Yamanaka M, Matsumoto K, et al, 2004, Introduction of Transcritical Refrigeration Cycle Utilizing CO_2 as Working Fluid. *Proc. ICEC,* Purdue, USA.

Ooi KT, 2008, Assessment of a rotary compressor performance operating at transcritical carbon dioxide cycles. *Applied Thermal Engineering*, vol.28, no.10: p. 1160-1167.

Zhang JQ, He B, Chang YF,et al. Study on high performanceinlet and discharge valves of linear cmopressor. *Proc*. 6th *ICCR,* Xi'an Jiaotong University: p. 70-77.

ACKNOWLEDGEMENT

The work described in this paper is financially supported by Ingersoll Rand Climate Solutions/Thermo King, Minneapolis, Minnesota, USA.