Purdue University
Purdue e-Pubs

International Compressor Engineering Conference | School of Mechanical Engineering

2010

Dynamic Balance Technology of Inverter Controller Rotary Compressor

Jianping Huang
Gree Electric Appliances

Yusheng Hu
Gree Electric Appliances

Sihai Xia
Gree Electric Appliances

Liping Ren
Gree Electric Appliances

Follow this and additional works at: http://docs.lib.purdue.edu/icec

Huang, Jianping; Hu, Yusheng; Xia, Sihai; and Ren, Liping, "Dynamic Balance Technology of Inverter Controller Rotary Compressor" (2010). *International Compressor Engineering Conference.* Paper 1949.
http://docs.lib.purdue.edu/icec/1949

This document has been made available through Purdue e-Pubs, a service of the Purdue University Libraries. Please contact epubs@purdue.edu for additional information.
Complete proceedings may be acquired in print and on CD-ROM directly from the Ray W. Herrick Laboratories at https://engineering.purdue.edu/Herrick/Events/orderlit.html

Dynamic Balance Technology of Inverter Controller Rotary Compressor

Jianping Huang, Yusheng Hu, Sihai Xia, Liping Ren

Compressor and Motor Institute of Gree Electric Appliance, Inc. of Zhuhai,
Jinji West Rd., Zhuhai City, 519070, P. R. China
Phone: 86-756-8668720, Fax: 86-756-8668982,
E-mail: hjp_jean@163.com

ABSTRACT

Rotational imbalance is one of the factors that affect the noise and vibration of inverter controller rotary compressor. The effect is serious as a result of higher speed. The rotor system of the compressor is taken as a study object in the paper. Introducing a dynamic balance coefficient according the effect of the flexibility of crankshaft, a mechanics equilibrium equation is built up. Because the effect of dynamic balance lies on a pair of reasonable balance weights, a parameter optimized method for designing balance is presented. Experiment is performed, and it is shown that the technology can be used to reduce the noise caused by rotational imbalance.

1. INTRODUCTION

The eccentric part of a crankshaft induces a centrifugal inertia force that causes the imbalance issue of compressor, such as the problem of noise and vibration. The traditional solving method is to add a pair of balancers in the upper and lower side of the rotor considering the crankshaft to be rigid. However, when the traditional method is applied to the higher rotation speed of rotary compressors, the level of noise and vibration is not ideal. As for rotary compressors, the reduction of noise and vibration is very important. This paper studies a dynamic balance technology for an inverter controller rotary compressor to reduce its noise and vibration.

In order to study on the balance system of a rotary compressor, the rotor system is constitutive of a crankshaft equipped with a roller, a motor rotor, and a pair of balancers, as shown in Figure 1.

Firstly, the deformation of the crank shaft of an inverter controller rotary compressor is analyzed.

Secondly, defining a dynamic balance coefficient according the effect of the flexibility of crank shaft, a mechanics equilibrium equation is built up. A method is established for balance design that takes into account crankshaft flexibility throughout the operating speed range.

Thirdly, noise and vibration experiments of compressors are performed to verify the dynamic balance technology.

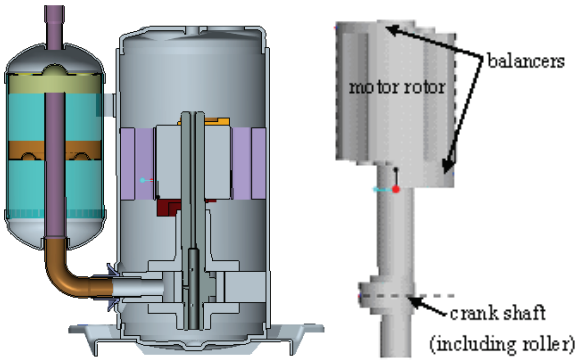

Figure 1: Rotary compressor and rotor system

2. CHARACTERISTICS OF CRANK SHAFT

A pair of eddy current type gap sensor are used to measure crank shaft deformation in the X axis and Y axis directions, as shown in Figure 2. Figure 3 shows an example of the measuring result of the rotation locus of the top of crank shaft, which becomes like a circle.
Orbit measurements are performed for different speeds of rotation within the range of 1800-5400 rpm. The maximum amplitudes of the orbits versus speeds of rotation are plotted in Figure 4. The counterweight masses located at the top and the bottom of the rotor induce radial forces on the crank shaft, which bends exponentially with the speed of rotation. The maximum deflection of the crankshaft at an operation speed of 5400 rpm is more serious than it at speed of 3000 rpm. By reason of this, the crank shaft of an inverter controller rotary compressor is unsuitable to be regarded as a rigid body. When a pair of balancers of an inverter controller rotary compressor is designed, the deformation the crank shaft should be considered.
The deflection of the crankshaft is calculated based on a FEM analysis model, as shown in Figure 5. Considering three different load cases, such as

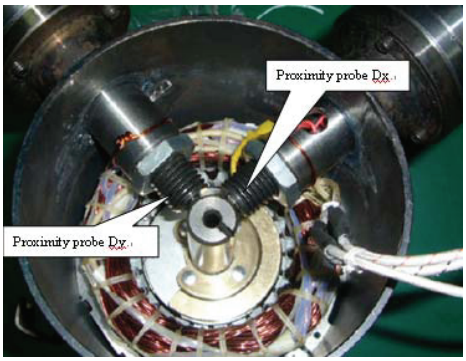

Figure 2: Experimental setup

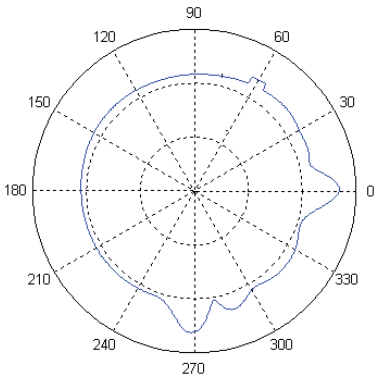

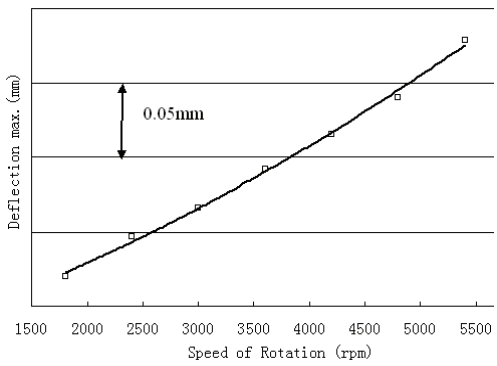

Figure 3: No dimensional orbits at 3600 rpm Figure 4: Measured deflection versus speed of rotation

The deflection of the crankshaft is calculated based on a FEM analysis model, as shown in Figure 5. Considering three different load cases, such as centrifugal inertia force, imbalance magnetic force and gas force, the deflections versus speed of rotation are calculated, as shown in figure 6. The results show that both the centrifugal inertia force and the imbalance magnetic force are two dominant factors which affect the deflection of the crankshaft. The deflection caused by the centrifugal inertia force results in an imbalance magnetic force, and the imbalance magnetic force worsens the deflection of the crankshaft. So an pair of appropriate balance weights are required for an inverter controller rotary compressor.

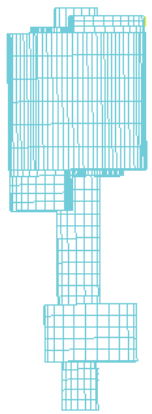

Figure 5: FEM Analysis model

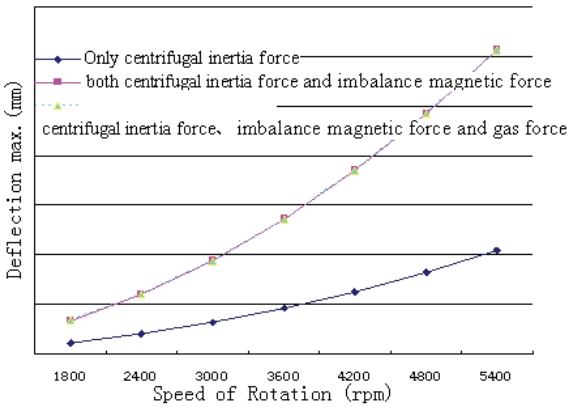

Figure 6: Calculated Deflection versus speed of rotation

3. FORMULATIONS AND DISCUSSIONS

Considering the effect of the flexibility of crankshaft, as shown in figure 7, a mechanics equilibrium equation is built up as follows.

$$\begin{cases} m_a(e_a+\delta_a)+m_e e_e+m_m\delta_m-m_p(e_p-\delta_p)=0 \\ m_a(e_a+\delta_a)L_a+m_m\delta_m L_{me}-m_p(e_p-\delta_p)L_p=0 \end{cases} \tag{1}$$

where L_p, L_a and L_m are the distances from the mass centre of a main balance weight, an auxiliary balance weight and a rotor to the mass centre of crankshaft eccentric part, respectively. m_p, m_a, m_m and m_e are the masses of a main balance weight, an auxiliary balance weight, a rotor and a crankshaft eccentric part respectively. e_p, e_a and e_e are eccentricities of a main balance weight, an auxiliary balance weight and a crankshaft eccentric part respectively. $N\&V$ are indexes of the noise and vibration of a compressor. $m_p e_p$, $m_a e_a$ and $m_e e_e$ are the unbalance quantities of a main balance weight, an auxiliary balance weight and a crankshaft eccentric part respectively. δ_p, δ_a and δ_m are the deformations of the crankshaft corresponding to the mass centre of a main balance weight, an auxiliary balance weight and a rotor.

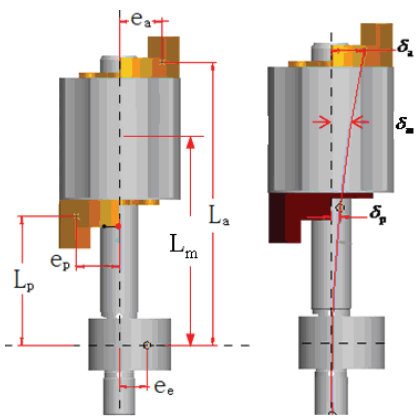

Figures 7 Schematic of mechanics system

Define a dynamic balance coefficient according the effect of the flexibility of crankshaft as follows:

$$e_s = 1 - \frac{m_a \delta_a + m_p \delta_p + m_m \delta_m}{m_p e_p} \tag{2}$$

$$e_d = 1 - \frac{m_a \delta_a L_a + m_p \delta_p L_p + m_m \delta_m L_{me}}{m_p e_p L_p} \tag{3}$$

The mechanics equilibrium equation can be deduced from equation (1) combined with equations (2) and (3) as follows:

$$\begin{cases} m_a e_a + m_e e_e - e_s m_p e_p = 0 \\ m_a e_a L_a - e_d m_p e_p L_p = 0 \end{cases} \tag{4}$$

The problem of a balance design of rotary compressor can be looked upon a problem of optimization design. It is described as follows:

$$\begin{aligned} &\text{Minimize} \begin{bmatrix} m_p + m_a \\ N \,\&\, V \end{bmatrix} \\ &\text{Subject to} \begin{cases} m_a e_a + m_e e_e - e_s m_p e_p = 0 \\ m_a e_a L_a - e_d m_p e_p L_p = 0 \end{cases} \\ &\text{Bounds on} \begin{cases} [0.1 m_e e_e, 0.1 m_e e_e] \le [m_p e_p, m_a e_a] \le [4 m_e e_e, 4 m_e e_e] \\ [0,0] \le [e_s, e_d] \le [2.0, 2.0] \end{cases} \end{aligned} \tag{5}$$

4. EXPERIMENT RESULTS

Two different type compressors' counterweights are studied, and the compressors are named Type 1 and Type 2 respectively. Type 1 compressor is equipped with a distributed winding motor, and three different dynamic balance coefficients are assumed for a pair of balance weights of the type 1 compressor, which are recorded proto type A, B and C respectively. Type 2 compressor is equipped with a concentrated winding motor, and three different dynamic balance coefficients are assumed for a pair of balance weights of the type 2 compressor, which are recorded proto type H, I and J respectively.

A vibration experiment on these compressors is done. An accelerometer is mounted on the bottom of a compressor, and the radial acceleration of a compressor is measured, as shown in Figure 8. Also, a series of noise experiment are done. The method of ten microphones is adopted and sound power measurement is installed as Figure 9.

Noise and vibration experiments of type 1 compressors are conducted. The radial vibration and noise measurement results are shown in Figure 10 and Figure 11 respectively. Also, a noise experiment is conducted on type 2 compressor, and the noise measurement results are shown in Figure 12.

The experiment results show that:

(1).As for Type 1 compressor, the noise and vibration level of proto type B is the best. Comparing with the proto type A, the vibration reduction of proto type B has been reduced by 7~10 m/s^2, the noise reduction of proto type B has been reduced by 1~3 dB(A) at the speed of 3600~5400 rpm.

(2).As for Type 2 compressor, the noise level of proto type I is the best. Comparing with the proto type H, the 3~4 dB(A) noise reduction of proto type I has been achieved at the speed of 2400~4200 rpm.

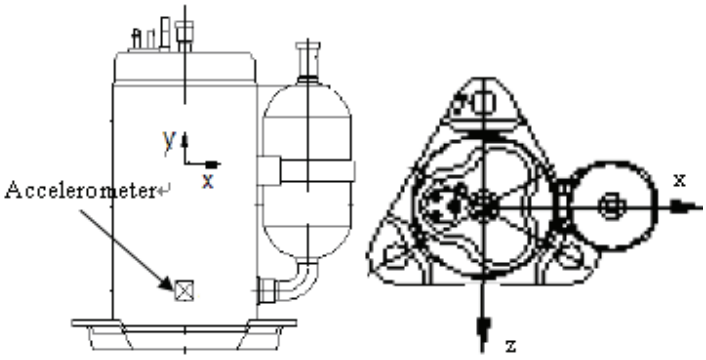

Figure 8: Vibration Measurement

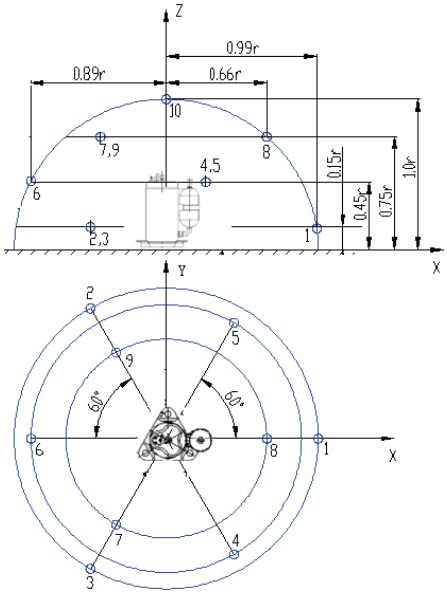

Figure 9: Sound Power Measurement

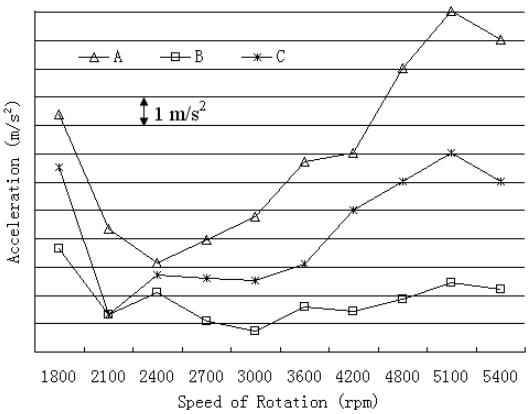

Figure 10: Radial Acceleration of Type 1

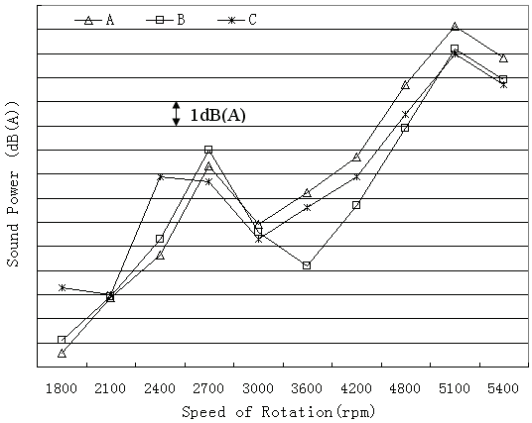

Figure 11: Sound Power of Type 1

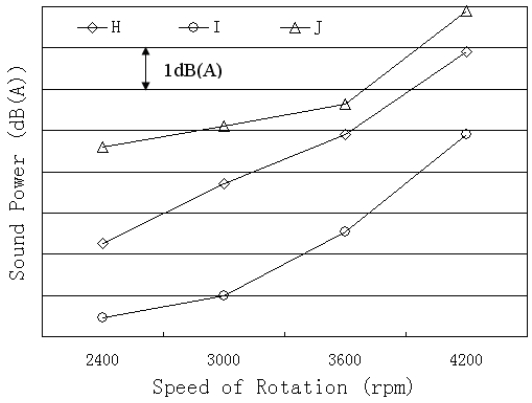

Figure 12: Sound Power of Type 2

5. CONCLUSIONS

A crankshaft deflection of an Inverter Controller Rotary Compressor is studied, and the crank shaft is unsuitable to be regarded as a rigid body. When a pair of balancers of an inverter controller rotary compressor is designed, the deformation the crank shaft should be considered.
A parameter optimized method for designing balance is presented. The balance systems of two type compressors are studied. There is an appropriate dynamic balance coefficient for an Inverter Controller Rotary Compressor, which can be used to reduce the noise and vibration caused by rotational imbalance.

REFERENCES

L. Marriot, 1994, Finite element calculation of rotor sidepull forces in single-phase induction motors, Proceedings Purdue Compressor Technology Conf., p727-734.

Frederic seve, Alain Berlioz, Regis Dufour, 2000, On the Unbalance Response of a Rotary Compressor, Proceedings Purdue Compressor Technology Conf., p831-838.

Frederic seve, Alain Berlioz, Regis Dufour, 2000, Experimental and Predicted Unbalance Response of a Rotary Compressor Crankshaft, Proceedings Purdue Compressor Technology Conf., p131-139.

Jianping Huang, Huijun Wei, Yusheng Hu, Ouxiang Yang, 2008, Study on Balance System of Rotary Compressor, Proceedings Purdue Compressor Technology Conf., 1232: p1-7.