Purdue University
Purdue e-Pubs

International Compressor Engineering Conference | School of Mechanical Engineering

2008

Analysis of Internal Leakage Across Radial Clearance in the Improved Revolving Vane (RV-i) Compressor

Yongliang Teh
Nanyang Technological University

Kimtiow Ooi
Nanyang Technological University

Follow this and additional works at: http://docs.lib.purdue.edu/icec

Teh, Yongliang and Ooi, Kimtiow, "Analysis of Internal Leakage Across Radial Clearance in the Improved Revolving Vane (RV-i) Compressor" (2008). *International Compressor Engineering Conference.* Paper 1931.
http://docs.lib.purdue.edu/icec/1931

This document has been made available through Purdue e-Pubs, a service of the Purdue University Libraries. Please contact epubs@purdue.edu for additional information.
Complete proceedings may be acquired in print and on CD-ROM directly from the Ray W. Herrick Laboratories at https://engineering.purdue.edu/Herrick/Events/orderlit.html

Analysis of Internal Leakage across Radial Clearance in the Improved Revolving Vane (RV-i) Compressor

Yong Liang TEH[1]*, Kim Tiow OOI[2]

Nanyang Technological University,
School of Mechanical & Aerospace Engineering,
Thermal & Fluids Engineering Division,
Singapore
[1] +65 6790 6174, tehy0002@ntu.edu.sg,
[2] +65 6790 5511, mktooi@ntu.edu.sg

ABSTRACT

An improved design of the Revolving Vane (RV) compressor (Teh and Ooi, 2006) has been introduced in the accompanying paper, 'Design and Friction Analysis of the RV-i Compressor'. The efficiency of the new compressor, alike other refrigeration compressors, is primarily affected by friction and internal leakage losses, amongst which the former has been investigated. In the present paper, the leakage flow across the radial clearance between the rotor and the cylinder in the new compressor is analyzed. The dynamic characteristic of the radial clearance is theoretically formulated, and the leakage mass flow across the clearance gap is calculated based on a method proposed by Yanagisawa and Shimizu (1985a). In a comparison study, it is found that the leakage loss at the radial clearance in the RV-i compressor is typically 40 % lesser than that of the rolling piston type.

1. INTRODUCTION

1.1 Leakage Loss in a Compressor

Internal leakage of the compression gas is one of the most detrimental factors that can downgrade the performance of a compressor by reducing its volumetric efficiency. In rotary compressors such as the rolling piston and scroll types, clearances are usually required between any pair of components in relative motion for the smooth and reliable operation of the compressor mechanism. At these clearances, leakage flows can readily occur due to the existence of a pressure differential. For example, in the rolling piston compressor, it is found that internal leakages of the refrigerant gas can occur at the radial and endface clearances of the rolling piston (Chu et al., 1978, Pandeya and Soedel, 1978, Ozu and Itami, 1981, Yanagisawa and Shimizu, 1985a, 1985b). A similar situation is also present in the scroll compressor where there also exist axial and radial clearances between meshing scrolls at which leakage flows occur (Ishii 1996). In order to minimize the leakage flows, generally, the tolerances of attributive components are controlled during manufacturing, after which selective matching may be employed to minimize the clearances. But, in the case of a clearance with dynamic fluctuations during operation, such as that demonstrated by Yanagisawa and Shimizu (1985a) in the rolling piston compressor, the leakage cannot be effectively reduced by precision control alone. Such a characteristic is also present in the RV-i compressor. Therefore, it is the purpose of this paper to investigate the leakage loss across the dynamic clearance in the new compressor.

1.2 Leakage Loss in the RV-i Compressor

Figure 1 shows the basic construction of the RV-i compressor which mainly comprises of a rotor with a rigidly attached vane and a cylinder. The rotor and the cylinder are assembled with an eccentricity such that a virtual line contact exists between the two components (at $\varphi = 0$ rad). Both the rotor and cylinder are supported individually and concentrically on bearing pairs and allowed to rotate about their respective axes of rotation. During operation, the rotation of the rotor revolves the vane which in turn rotates the cylinder. The motion causes the volumes trapped within the rotor, vane and cylinder to vary, resulting in suction, compression and discharge of the working fluid.

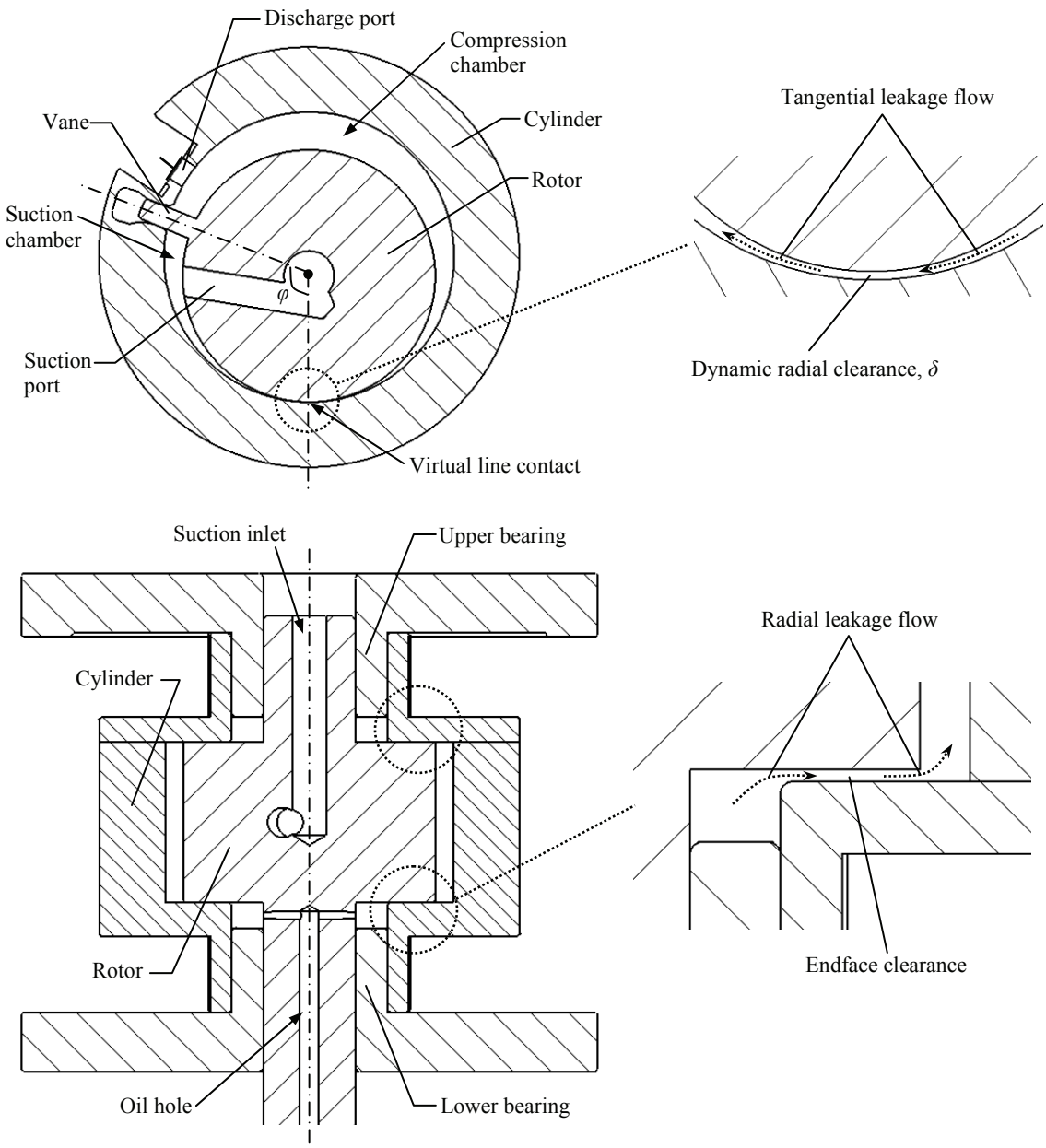

Figure 1: Locations of internal leakage in the RV-i compressor (in dashed circles)

Similar to the rolling piston compressor, internal leakages of the refrigerant gas can occur in the RV-i compressor at the radial and endface clearances between the rotor and the cylinder, as shown in Figure 1. At the radial clearance, the working fluid leaks tangentially from the compression chamber to the suction chamber. Correspondingly at the upper and lower endface clearances, there is radial leakage of the refrigerant being dissolved in the lubrication oil from the high-pressure shell to the working chambers. Amongst the two leakages, it is foreseen that the tangential leakage at the radial clearance is more critical, as the endface leakage can be effectively minimized by reducing the endface clearance. In fact, according to Yanagisawa and Shimizu (1985b), when the total endface clearance in the rolling piston compressor is below 15 μm, the decrease of volumetric efficiency due to the endface leakage becomes negligible. Such a condition can also be applied to the RV-i compressor for eliminating the endface leakage loss. It is important to note that when the endface clearance is made small in the RV-i compressor, the endface friction which occurs due to viscous shear of the oil film is not noticeably increased due to small sliding velocities between opposite surfaces at each endface clearance. Therefore, we shall only address the leakage loss at the radial clearance in this paper.

2. THEORETICAL MODEL

2.1 Radial Clearance between Rotor and Cylinder

During assembly, the radial clearance is statically defined by the radii of the rotor and cylinder and the distance between their bearing centers. However, during operation, the positions of the rotor and cylinder journals change dynamically due to varying forces which causes variations in the clearance gap. Figure 2 shows the definition of the dynamic radial clearance, δ, and its attributive components. Due to the motions of the rotor and cylinder journals, δ can be found to vary according to the equation:

$$\delta = \delta_0 + \left(R_{cy} - R_{ro}\right) - e_{rc} \tag{1}$$

in which δ_0 is the assembly radial clearance when both the rotor and cylinder journals are respectively concentric to their bearing centers. The distance between the respective journal centers has the geometrical relation:

$$e_{rc} = \sqrt{e_{rc,x}^2 + e_{rc,y}^2} \tag{2}$$

where the orthogonal components can be found to be respectively defined by:

$$\begin{aligned} e_{rc,x} &= \delta_{b,ro}\varepsilon_{ro}\sin\left(\Phi_{ro} + \beta_{ro}\right) - \delta_{b,cy}\varepsilon_{cy}\sin\left(\Phi_{cy} + \beta_{cy}\right) \\ e_{rc,y} &= \delta_{b,ro}\varepsilon_{ro}\cos\left(\Phi_{ro} + \beta_{ro}\right) - \delta_{b,cy}\varepsilon_{cy}\cos\left(\Phi_{cy} + \beta_{cy}\right) + R_{cy} - R_{ro} \end{aligned} \tag{3}$$

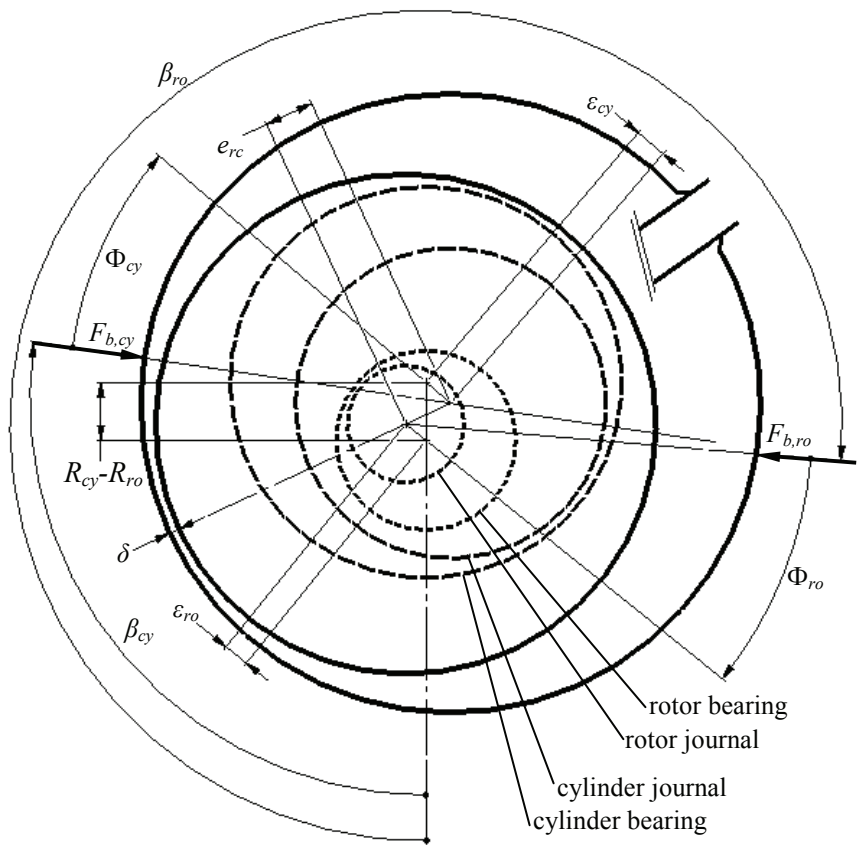

Figure 2: Definition of the dynamic radial clearance, δ, and its attributive components (eccentricities are exaggerated for clarity - the position of δ remains in the vicinity of $\varphi = 0$ rad)

Equations (1) to (3) clearly indicate that the radial clearance changes according to the relative positions of the rotor and cylinder journal centers, defined by their respective eccentricities and attitude angles. In this paper, the characteristics of the journal bearings are calculated based on a method of solution proposed by Hirani *et al*. (1999) for dynamically loaded finite length bearings. The radial and angular velocities of the journal centers are respectively given by:

$$\dot{\varepsilon}_J = \frac{\sqrt{F_{bx,J}^2 + F_{by,J}^2}\left(\delta_{b,J}/R_{b,J}\right)^2}{6\mu L_{b,J} R_{b,J}} M_J^{\varepsilon}, \quad \dot{\Phi}_J = \frac{\sqrt{F_{bx,J}^2 + F_{by,J}^2}\left(\delta_{b,J}/R_{b,J}\right)^2}{6\mu L_{b,J} R_{b,J} \varepsilon_J} M_J^{\Phi} + \frac{\omega_J}{2} - \dot{\beta}_J \tag{4}$$

where subscript $J = ro$, cy for the respective rotor and cylinder journals. M_J^{ε} and M_J^{Φ} are mobility components defined in the reference. The resultant force on the rotor journal is mainly caused by the pressure forces and the contact forces at the vane sides, whereas for the cylinder journal it is due to the pressure forces and the inertia force of the cylinder (Teh and Ooi, 2008), i.e.

$$\begin{aligned} F_{bx,ro} &= F_{sx,ro} - F_{cx,ro} + \left(F_{c,v} - F_{s,v}\right)\cos\varphi + F_{n,v}\cos\varphi - \eta_{vs}\left|F_{n,v}\right|\operatorname{sgn}\left(\dot{r}_v\right)\sin\varphi, \\ F_{by,ro} &= F_{sy,ro} - F_{cy,ro} - \left(F_{c,v} - F_{s,v}\right)\sin\varphi - F_{n,v}\sin\varphi - \eta_{vs}\left|F_{n,v}\right|\operatorname{sgn}\left(\dot{r}_v\right)\cos\varphi \end{aligned} \tag{5}$$

$$\begin{aligned} F_{bx,cy} &= F_{cx,cy} - F_{sx,cy} - F_{n,v}\cos\varphi + \eta_{vs}\left|F_{n,v}\right|\operatorname{sgn}\left(\dot{r}_v\right)\sin\varphi, \\ F_{by,cy} &= F_{cy,cy} - F_{sy,cy} + F_{n,v}\sin\varphi + \eta_{vs}\left|F_{n,v}\right|\operatorname{sgn}\left(\dot{r}_v\right)\cos\varphi \end{aligned} \tag{6}$$

It is to be noted that when the rotor journal rotates at a constant velocity, the angular velocity of the cylinder journal is constantly varying due to the offset between the bearing centers, such that it follows the expression:

$$\omega_{cy} = \omega_{ro}\frac{d}{d\varphi}\left\{\cos^{-1}\left[\frac{R_{cy}^2 + \left(R_{cy} - R_{ro}\right)^2 - r_v^2}{2R_{cy}\left(R_{cy} - R_{ro}\right)}\right]\right\} \tag{7}$$

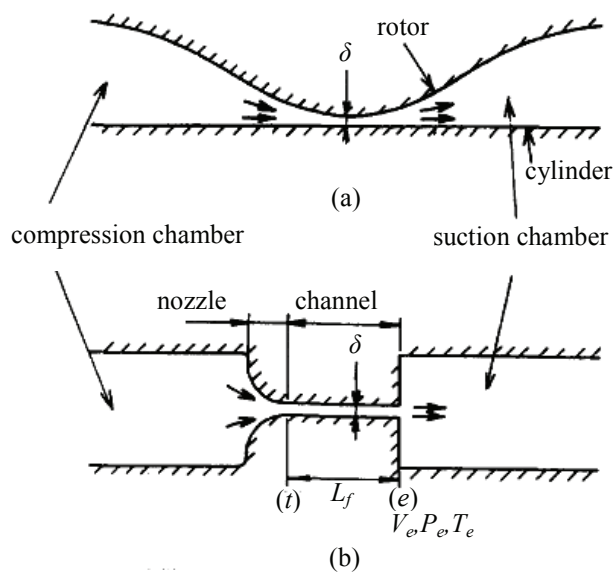

Figure 3: Modelling of leakage path at radial clearance: (a) Actual flow path, (b) Model flow path

Table 1: Operating specifications and main dimensions of RV-i compressor

Operating specifications	
volumetric displacement, V_c	12.15 cm^3/rev
operational speed, ω_{ro}	358 rad s^{-1}
working fluid	R22
suction pressure, P_s (abs)	0.583 MPa
discharge pressure, P_d (abs)	2.03 MPa
Main dimensions	
rotor radius, R_{ro}	23.8 mm
cylinder radius, R_{cy}	27 mm
compressor axial length, L_c	23.8 mm
rotor bearing radius, $R_{b,ro}$	9.6 mm
total length, $L_{b,ro}$	58 mm
radial clearance, $\delta_{b,ro}$	13 μm
cylinder bearing radius, $R_{b,cy}$	14.8 mm
total length, $L_{b,cy}$	34 mm
radial clearance, $\delta_{b,cy}$	13 μm
Assembly radial clearance, δ_0	20 μm
lubricant dynamic viscosity, μ	3.4 mPa s

For simplicity of analysis, it has been assumed in the foregoing formulations that the upper and lower bearings are perfectly aligned and have identical dimensions, for both the rotor and the cylinder, such that each respective journal load is divided equally between the upper and lower bearings.

2.2 Leakage Mass Flow Rate across Radial Clearance

At the radial clearance in the RV-i compressor, the geometry of the leakage channel can be clearly observed to be exactly similar to that in the rolling piston compressor, which takes the shape of a crescent. Therefore, the leakage flow across the radial clearance in the new compressor is modelled using a method proposed by Yanagisawa and Shimizu (1985a) for the rolling piston compressor. The method takes into account of the viscous friction imposed on the flow due to the leakage path being long and narrow as compared to its height, which has achieved good agreement between theoretical predictions and experimental results. Mainly, the actual leakage path (Figure 3a) is modelled using the flow channel shown in Figure 3b, which consists of a compression chamber, a convergent nozzle, a straight channel imposing viscous drag on the flow and a suction chamber. The friction length L_f is found by equating the frictional loss in the model channel to that developed in the actual leakage path, which can be found to give the expression:

$$L_f = \frac{2\pi\delta R_{cy}}{\left(R_{cy} - R_{ro}\right)\sqrt{1-\left(R_{cy} - R_{ro}\right)^2}} \tag{8}$$

Subsequently, by considering isentropic flow across the convergent nozzle and adiabatic frictional (Fanno) flow across the straight channel, the pressure, P_e, temperature, T_e and flow velocity, V_e, at the channel exit can be found by comparing the calculated pressure ratio across the entire model leakage path to the known pressure ratio between the compression and suction chambers. The instantaneous leakage mass flow rate is then found by the relation:

$$q_m = \delta L_c V_e \left(\frac{P_e}{R_g T_e}\right) \tag{9}$$

3. RESULTS AND COMPARISON

In this section, the leakage loss at the radial clearance of the RV-i compressor is compared to that of the rolling piston compressor used for air-conditioning investigated by Yanagisawa and Shimizu (1985a), where both compressors assumes a similar set of operating specifications and main dimensions as shown in Table 1. Figure 4a shows the variation of the radial clearance, δ, and the distance between the rotor and cylinder journal centers, e_{rc}, for one complete shaft revolution. Generally, δ changes in a similar manner to that in the rolling piston compressor (δ_{RP}), and increases above its assembly value, δ_0, for most part of the cycle. This is due to the motion of the rotor and cylinder journals under the dynamic loads, which causes e_{rc} to decrease below its assembly value, $R_{cy} - R_{ro}$, especially in the vicinity of $\varphi = 0$ rads. In order to better understand the influence of the journal motions on the radial clearance, the respective journal loads, $F_{b,ro}$ and $F_{b,cy}$, and loci, ε_{ro} and ε_{cy}, are plotted in polar coordinates as shown in Figure 5a. It is clearly observed the rotor and cylinder bearing forces act in opposite directions with equivalent magnitudes throughout the working cycle, which indicates a perfect dynamic balance of the compressor. The opposing journal forces result in the loci of the respective journals to be highly symmetrical to each other. For both the rotor and cylinder bearings, the eccentricities decrease in the region of $\varphi = 0$ to $\pi +$ rads, and increase from there onwards to the end of the cycle, even though the bearing loads decrease in the later half of the cycle. This is because the RV-i compressor, alike the rolling piston compressor, has bearing forces that change their direction by half the speed of the shaft rotation, which causes the eccentricities to 'overshoot' resulting in a decrease in the load capacity of each journal bearing. It is noticed that when the bearings have lesser eccentricities, the radial clearance is smaller, and vice-versa. Since the bearing eccentricity decrease with a higher load capacity, it is anticipated that by adequately over-sizing the bearing, a smaller δ can be achieved which decreases the leakage loss without overly increasing the bearing friction.

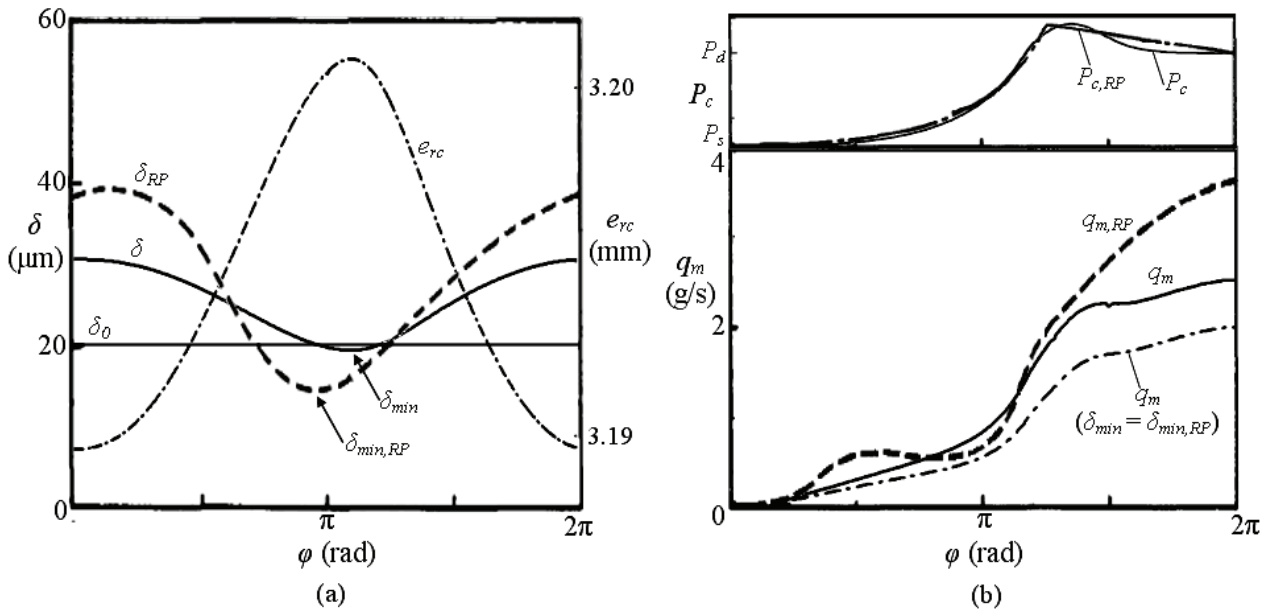

Figure 4: (a) Variation of radial clearance and distance between journal centers (Note: δ_0 is the same for both compressors); (b) Variation of instantaneous leakage mass flow rate at radial clearance

Although the radial clearance for the RV-i compressor varies in a similar manner to that in the rolling piston compressor, it is however of a lesser magnitude for the former, which thus alleviates the leakage flow in comparison to that in the rolling piston design. Figure 4b shows the variation of the instantaneous leakage mass flow rate in both compressors when they are subjected to similar pressure changes. As compared to the rolling piston compressor, it is clearly observed that the leakage flow across the radial clearance is less severe in the RV-i compressor, especially during the second half of the cycle when the pressure differential across the leakage path is large. There are two reasons for the improvement in the new compressor, which can be explained by comparing Figures 5a and 5b. Firstly, unlike the rolling piston compressor, there is no piston bearing in the RV-i compressor which has been found to exhibit a high eccentricity, especially towards the end of the shaft revolution. The high eccentricity causes the radial clearance to be increased which results in more leakage flow and is further aggravated by the large pressure differential. Secondly, although both compressors experience similar pressure changes in their working chambers, the design of the RV-i compressor exhibits lesser bearing loads, with a lower maximum of about 2.0 kN as compared to 2.2 kN in the rolling piston design. This is because unlike the rolling piston compressor, the bearings in the RV-i compressor do not experience additional loads caused by vane tip contact forces and centrifugal forces. The lower bearing forces results in smaller bearing eccentricities, contributing to the reduced radial clearance. Thus, even with the same dimensions, a lower leakage loss at the radial clearance is clearly observed in the RV-i compressor as compared to the rolling piston design.

The smaller variation of δ over δ_{RP} suggests the capacity for further reduction of the leakage loss in the new compressor. To explain this statement, it is necessary to realize that in Figure 4a, the minimum radial clearance, $\delta_{\min}$, which occur in the vicinity of $\varphi = 0$ radians for both compressors, differ. This is because due to the reasons mentioned above, the variation amplitude of δ in the RV-i compressor is smaller. Usually, a minimum radial clearance is to be provided throughout the entire shaft revolution in order to ensure a safe operation of the compressor such that no collision between the rotor/rolling piston and the cylinder can occur. Hence, in this aspect of ensuring operational reliability, the assembly radial clearance, δ_0, of the RV-i compressor can be decreased from 20 μm to 15 μm such that $\delta_{\min}$ for both compressors becomes the same, at about 14 μm. When this happens, the leakage mass flow rate of the RV-i compressor is further decreased as shown in Figure 4b. Effectively, the leakage loss at the radial clearance is reduced by more than 40 % in the RV-i compressor as compared to that in the rolling piston design.

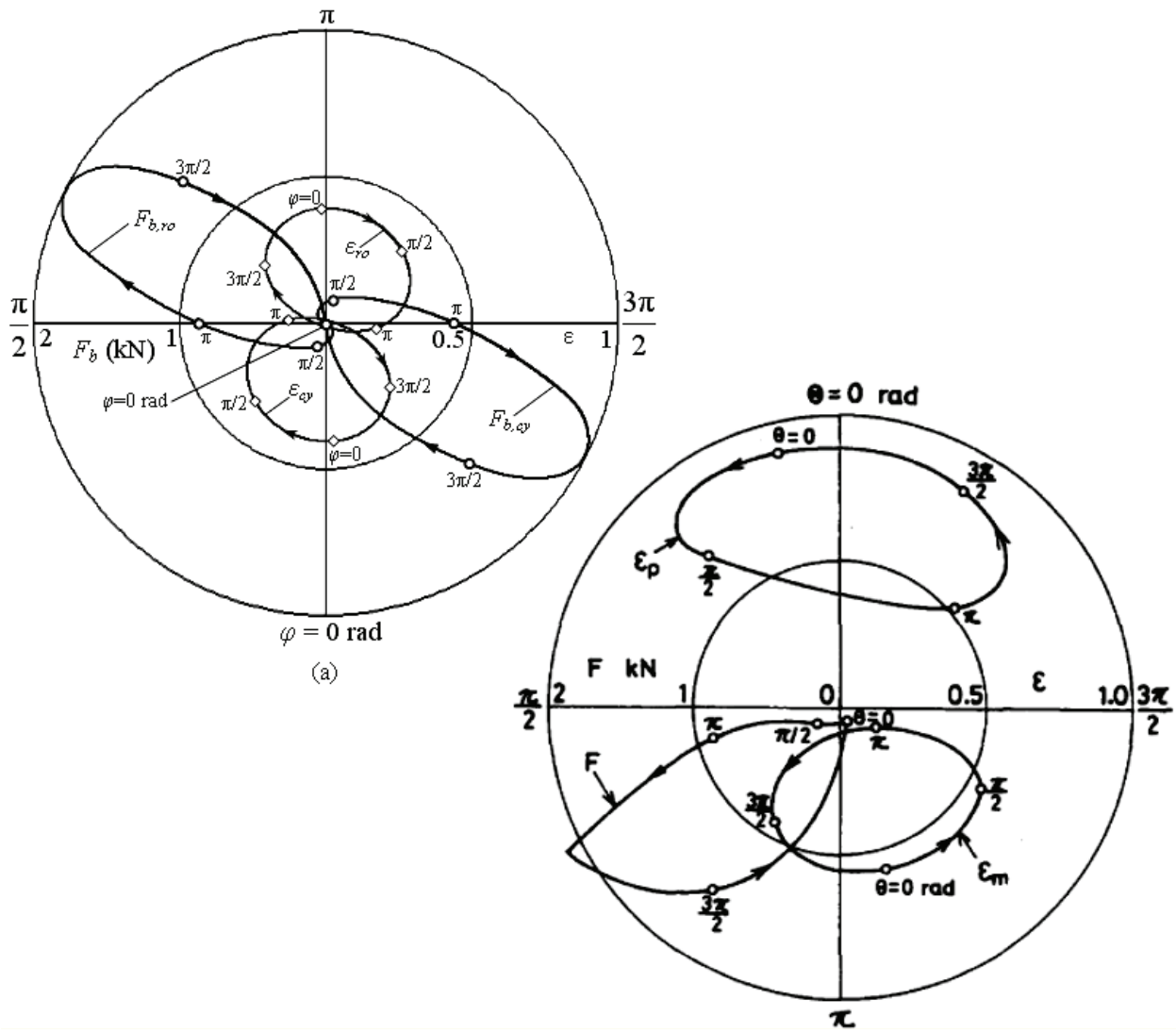

Figure 5: Variation of journal loads and loci of journal centres for: (a) RV-i compressor, (b) rolling piston compressor (F = bearing force; ε_m, ε_p = eccentricity of main bearing and piston bearing, respectively)

6. CONCLUSIONS

The leakage loss at the radial clearance of the RV-i compressor has been theoretically formulated and analyzed. During steady operation, the new compressor has been found to exhibit smaller radial clearances between the rotor and the cylinder as compared to that in the existing rolling piston compressor, which therefore alleviates the leakage loss at that region. In addition, the variation amplitude of the radial clearance in the RV-i compressor is also lesser which allows the leakage loss to be further reduced by decreasing the assembly radial clearance. In comparison to the rolling piston compressor, a reduction of more than 40 % in the leakage loss at the radial clearance has been predicted in the new design. The RV-i compressor can thus be expected to have a high volumetric efficiency. In conjunction with its high mechanical efficiency (Teh and Ooi, 2008), it is believed that the RV-i compressor has the potential to achieve the highest COP values of a refrigeration compressor. Further development is in progress.

NOMENCLATURE

e_{rc}	distance between rotor and cylinder journal centers [m]
F	force [N]
L	length [m]
L_c	axial length of working volume [m]
L_f	friction length of leakage path [m]
P	pressure [Pa]
q_m	leakage mass flow rate [kg s^{-1}]
R	prescribed radius [m]
r_v	radial distance from rotor center to neck of vane slot [m]
t	time [s]
V	velocity [m s^{-1}]
β	bearing force angle [rad]
δ	dynamic radial clearance [m]
δ_0	assembly radial clearance [m]
δ_b	prescribed radial clearance of bearing [m]
ε	bearing eccentricity ratio [-]
η_{vs}	kinetic friction coefficient at vane sides [-]
μ	dynamic viscosity of lubricant [N s m^{-2}]
φ	driver/rotor angle [rad]
Φ	bearing attitude angle [rad]
ω	angular velocity [rad s^{-1}]

Subscripts

b	of bearing
c	compression
cy	of cylinder
d	discharge
e	at model channel exit
n	normal to
ro	of rotor
s	suction
v	at vane

REFERENCES

Chu, I., Shiga,T., Ishijima, K., Sakaino, M., 1978, Analysis of the Rolling-Piston Type Rotary Compressor, Proc. Purdue Compressor Technology Conference, 219-225

Hirani, H., Athre, H., Biswas, S., 1999, Dynamically Loaded Finite Length Journal Bearings: Analytical Method of Solution, ASME Journal of Tribology, 121, 844-852

Ishii, N., Bird, K., Sano, K., Oono, M., Iwamura, S., Otokura, T., 1996, Refrigerant Leakage Flow Evaluation for Scroll Compressors, Proc. Purdue Compressor Technology Conference, 633-638

Ozu, M., Itami, T., 1981, Efficiency Analysis of Power Consumption in Small Hermetic Refrigerant Rotary Compressors, International Journal of Refrigeration, 4(5), 265-270

Pandeya, P., Soedel, W., 1978, Rolling Piston Type Compressors with Special Attention to Friction and Leakage, Proc. Purdue Compressor Technology Conference, 209-218

Teh, Y. L., Ooi, K. T., 2006, Design and Friction Analysis of the Revolving Vane (RV) Compressor, Proc. Purdue Compressor Technology Conference, C046

Teh, Y. L., Ooi, K. T., 2008, Design and Friction Analysis of the Improved Revolving Vane (RV-i) Compressor, Proc. Purdue Compressor Technology Conference, Paper No. 1233

Yanagisawa, T., Shimizu, T., 1985a, Leakage Losses with a Rolling Piston Type Rotary Compressor. I. Radial Clearance on the Rolling Piston, International Journal of Refrigeration, 8(2), 75-84

Yanagisawa, T., Shimizu, T., 1985b, Leakage Losses with a Rolling Piston Type Rotary Compressor. II. Leakage Losses through Clearance on Rolling Piston Faces, International Journal of Refrigeration, 8(3), 152-158