Purdue University
Purdue e-Pubs

International Compressor Engineering Conference | School of Mechanical Engineering

2008

Optimal Performance Development of High-Pressure Type Ammonia Scroll Compressors for Maximum Efficiency

Tatsuya Oku
Mayekawa Mfg. Co.

Noriaki Ishii
Osaka Electro-Communication Univ.

Keiko Anami
Ashikaga Institute of Technology

Charles W. Knisely
Bucknell University

Akira Matsui
Mayekawa Mfg. Co.

See next page for additional authors

Follow this and additional works at: http://docs.lib.purdue.edu/icec

Oku, Tatsuya; Ishii, Noriaki; Anami, Keiko; Knisely, Charles W.; Matsui, Akira; Sato, Harumi; and Yoshirio, Naoya, "Optimal Performance Development of High-Pressure Type Ammonia Scroll Compressors for Maximum Efficiency" (2008). *International Compressor Engineering Conference.* Paper 1905.
http://docs.lib.purdue.edu/icec/1905

This document has been made available through Purdue e-Pubs, a service of the Purdue University Libraries. Please contact epubs@purdue.edu for additional information.
Complete proceedings may be acquired in print and on CD-ROM directly from the Ray W. Herrick Laboratories at https://engineering.purdue.edu/Herrick/Events/orderlit.html

Authors
Tatsuya Oku, Noriaki Ishii, Keiko Anami, Charles W. Knisely, Akira Matsui, Harumi Sato, and Naoya Yoshirio

This article is available at Purdue e-Pubs: http://docs.lib.purdue.edu/icec/1905

Optimal Performance Development of High-Pressure Type Ammonia Scroll Compressors for Maximum Efficiency

Tatsuya OKU[1], Noriaki ISHII[2], Keiko ANAMI[3], Charles W. KNISELY[4], Akira MATSUI[1], Harumi SATO[1], Naoya YOSHIHIRO[1]

[1] Research and Development Center, Mayekawa MFG. Co., Ltd., Moriya-City, Ibaraki , Japan
Tel: +81-297-48-1364, Fax: +81-297-5170, E-mail: tatsuya-oku@mayekawa.co.jp

[2] Division of Mechanical Engineering, Osaka Electro-Communication University, Neyagawa-City, Osaka, Japan
Tel: +81-728-20-4561, E-mail: ishii@isc.osakac.ac.jp

[3] Division of Mechanical Engineering, Ashikaga Institute of Engineering, Ashikaga-City, Tochigi, Japan

[4] Mechanical Engineering Department, Bucknell University, Lewisburg PA 17837, USA

ABSTRACT

This study presents computer simulations of the volumetric, mechanical and compression efficiencies of a high-pressure scroll compressor for ammonia, with a suction volume of 192.5 cm^3. Computer calculations were made for a number of combinations of the involute base circle radius and the scroll height for a fixed cylinder diameter of 155 mm. As a result, the design dimensions of the scroll configuration leading to the optimum efficiency are presented for this particular cylinder diameter. Based on the computer simulations presented here, a high efficiency scroll compressor for ammonia has been developed and is expected to enter the market in 2008.

1. INTRODUCTION

In recent years, increased environmental concerns, such as global warming and energy utilization, have motivated the use of naturally occurring refrigerants and the optimization of components in the air-conditioning industry. In this context, the use of ammonia as a refrigerant with a zero potential contribution to global warming is attractive. In addition, ammonia has a significant technical advantage in that its heat capacity is 5.9 times larger than that of R22 and 3.9 times larger than that of CO_2, thereby making it especially advantageous when used in systems with large cooling capacities. Based on these environmental and technical issues, the refrigeration and air-conditioning markets have been demanding the development of scroll compressors (generally acknowledged to exhibit high performance and low vibration and low noise levels) for use with ammonia. In order to develop a high efficiency ammonia scroll compressor, a computer simulation of its expected performance was needed to optimize the combination of geometrical dimensions that would yield with maximum performance.

To satisfy this need for a computer simulation, the methodology used in earlier studies (Ishii *et al.* 1996a,b, 2002b) on optimizing scroll compressor performance for use with R22 and CO_2 was adapted to predict the performance of an ammonia scroll compressor with an approximate cooling capacity of 30 kW. Using this established methodology, the dependencies of the mechanical, compression and volumetric efficiencies on the dimensions of the involute base circle radius and the scroll height for a fixed cylinder diameter of 155 mm were determined. As a result, a high pressure ammonia scroll compressor with maximum performance was developed and is currently being manufactured to supply the market demand.

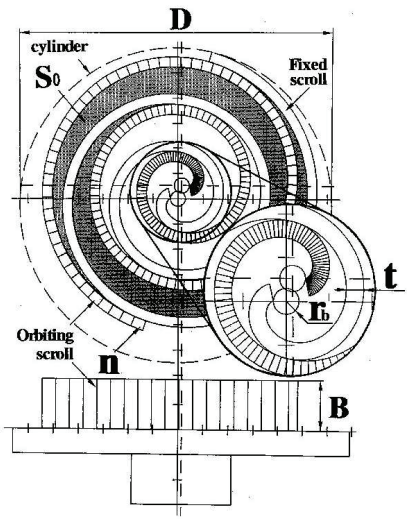

Figure 1 Sectional view of scroll compressor.

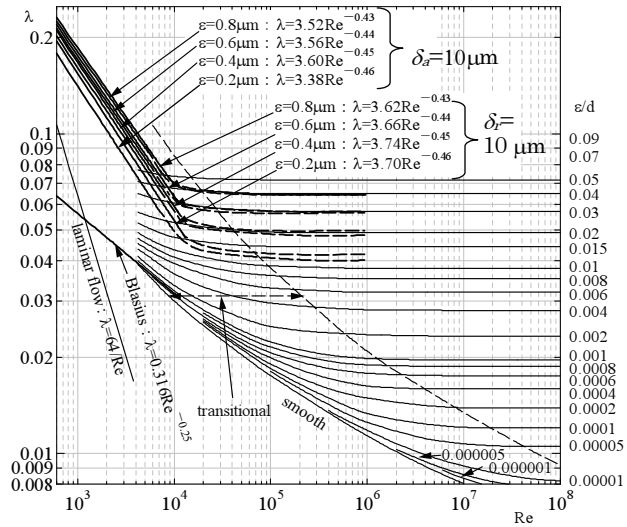

Figure 2 Friction factors of axial and radial leakage flows of CO_2, plotted on Moody diagram.

2. PERFORMANCE SIMULATION

Figure 1 shows a sectional view of an involute type scroll compressor. The scroll wrap profile is determined by the combination of the involute base circle radius r_b, the wrap thickness t and the wrap height B for a cylinder diameter D.

Refrigerant leakage through the wrap clearances depends on the combination of these dimensions, as well on the friction loss at the sliding pairs and the gas pressure in the compression chambers. The leakage, in turn, significantly affects the volumetric, mechanical, compression and overall efficiencies.

2.1 Volumetric Efficiency η_v

The volumetric efficiency η_v can be calculated as the ratio of the actual discharge mass flow rate to the theoretical mass flow rate into compressor:

$$\eta_v = \frac{Q_e}{Q_{th}} = \frac{Q_{th} - Q}{Q_{th}} \tag{1}$$

where Q_e is the actual discharge mass flow rate from compressor, which can be calculated by subtracting the leakage mass flow rate, Q, from the theoretical mass flow rate into compressor suction port, Q_{th}. This leakage flow rate through the small clearances caused by the pressure difference between compression chambers in the scroll compressor can be determined using the simple theory by Ishii *et al.* (1996a) and Oku *et al.*, (2005, 2006). The overall leakage mass flow rate for one revolution of the scroll's orbiting movement can be calculated by integrating the local differential leakage mass flow rate over the length of the scroll wrap.

Once the scroll wrap profile is determined from the given parameters, such as compressor size, motor power and refrigeration capacity, the volume and the pressure in the compression chambers formed between the orbiting and fixed scrolls can be calculated geometrically. Subsequently, the leakage flow can be calculated.

To calculate the leakage flow through the small clearances in scroll compressors, the Darcy-Weisbach equation for incompressible, viscous fluid flow was applied, using an friction factor λ, shown in Figure 2 for CO_2. It is of significance to note that the corresponding empirically determined friction factor for R22 has been found to be almost indistinguishable from that for CO_2 (Oku *et al.*, 2005). On this basis, it is assumed that the friction factor can

be considered to be independent of the refrigerant itself. With this assumption, the friction factor λ for ammonia can be given as:

$$\lambda_a = 3.38Re^{-0.46} \quad \text{and} \quad \lambda_r = 3.70Re^{-0.46} \tag{2}$$

where λ_a is the friction factor for the axial clearance and λ_r is that for the radial clearance. The surface roughness was assumed to be 0.2μm and the axial and radial clearances to be 10 μm.

2.2 Mechanical Efficiency η_m

The mechanical friction (between the crankshaft and the crank journal, the crank pin and the orbiting scroll, the orbiting scroll and the Oldham ring, and the orbiting scroll and the thrust bearing) is the major source of power loss in scroll compressors. These mechanical friction loads can be obtained from a dynamic analysis for each pair of machine elements, and then summed to determine the overall friction force.

Dynamic equilibrium analysis yields the equation of motion governing the behavior of the crankshaft rotation given in the following expression (Ishii, *et al.*, 1992):

$$\begin{aligned}\left(I_0 + m_s r_0^2 + m_o r_0^2 \sin^2\theta\right)\cdot\ddot{\theta} + m_o r_0^2 \sin\theta\cos\theta\cdot\dot{\theta}^2 = N - \{&F_t r_0 + L_Q + L_s + \left(f_{x1} + f_{x2}\right)\cdot r_0 \sin\theta \\ &+ \left(f_{y1} + f_{y2}\right)\cdot r_0 \cos\theta + \left(f_{t1} + f_{t2}\right)\cdot r_0\}\end{aligned} \tag{3}$$

where, the terms on left side represent the inertia torques and those on the right side represent the motor drive torque N and the torque loads due to the gas compression, the mechanical friction torques at the crankshaft, the crankpin, the Oldham ring and the thrust slide-bearing. The mechanical friction forces are obtained as the product of the resultant force at each pair of compressor elements and the corresponding friction coefficient. The equation of motion (Eq. 3) can be solved numerically for the given torque characteristic of the electric motor and the pressure in the compression chambers to obtain a periodic solution.

Integrating the equation of motion of the crankshaft over the duration of one revolution of the crankshaft, an energy balance can be obtained. The shaft input energy W_s, the gas compression energy W_i and the frictional losses W_f are given by the following expressions, respectively:

$$\begin{aligned} W_s &= \int_0^{T\tau} N\dot{\theta}dT \quad and \quad W_i = \int_0^{T\tau} F_r r_o \dot{\theta} dT \\ W_f &= \int_0^{T\tau} \{L_Q + L_S + \left(f_{t1} + f_{t2}\right) r_o\}\dot{\theta}dT \end{aligned} \tag{4}$$

The mechanical efficiency η_m can then be calculated as:

$$\eta_m = \frac{W_i}{W_s} = \frac{W_s - W_f}{W_s} \tag{5}$$

2.3 Compression Efficiency η_c

Due to the continual re-compression of the leakage flows and the dissipation of energy through the frictional losses associated with the leakage flow, a scroll compressor with leakage requires greater compression power than one with no leakage. Therefore, the compression efficiency η_c can be defined by the ratio of the theoretical compression power with no leakage, E_{th}, to that for the compressor with leakage, denoted by η_c takes on a value that is then less than 1.0:

$$\eta_c = \frac{E_{th}}{E} \tag{6}$$

2.4 Resultant Efficiency η

The overall efficiency η can be obtained as the product of the component efficiencies η_v, η_m and η_c:

$$\eta = \eta_v \times \eta_m \times \eta_c \tag{7}$$

Table 1 Operation conditions and major dimensions for performance calculations.

Operation conditions	Condensation temperature	T_c [°C]	55
	Condensation pressure	P_c [MPa]	2.31
	Evaporation temperature	T_s [°C]	0
	Evaporation pressure	P_S [MPa]	0.43
Major dimensions	Involute base circle radius	r_b [mm]	3.4 ~ 5.4
	Scroll thickness	t [mm]	4.7
	Scroll height	B [mm]	28.8 ~ 45.7
	Orbiting radius	r_0 [mm]	5.98 ~ 12.26
	Suction volume	V [cm^3]	192.5
	Cylinder disameter	D [mm]	155
	Axial clearance	δ_a [μm]	10
	Radial clearance	δ_r [μm]	10
	Fric. coef. at thrust bearing	μ_s [-]	0.055
	Fric. coef. at crankpin	μ_{cp} [-]	0.011
	Fric. coef. at crank journal	μ_{cj} [-]	0.011
	Fric. coef. at ball bearing	μ_{cb} [-]	0.0013

which represents the ratio of the accumulated energy in the discharged refrigerant to the shaft input power.

3. CALCULATED RESULTS OF EFFICIENCIES

The major specifications for computer calculations are shown in Table 1, where the operation conditions and the major dimensions of compressor are specified. The condensation temperature is 55°C and the evaporation temperature is 0°C. The suction volume V, cylinder diameter D and wrap thickness t are conventionally fixed at 192.5 cm^3, 155 mm and 4.7 mm, respectively. As a result, the scroll wrap height B is determined for a given value of the involute base circle radius r_b. The orbiting radius r_0 changes from 5.98 mm to 12.26 mm with increasing involute base circle radius r_b from 3.4 mm to 5.4 mm. Both the axial clearance δ_a and radial clearance δ_r are fixed at 10 μm. The friction coefficients, as is usual, are taken to be 0.055 for the thrust slide bearing, 0.011 for the crank pin and crank journal and 0.0013 for the ball bearing at the end of the crank shaft, all which were measured by friction tests on small cooling capacity compressors.

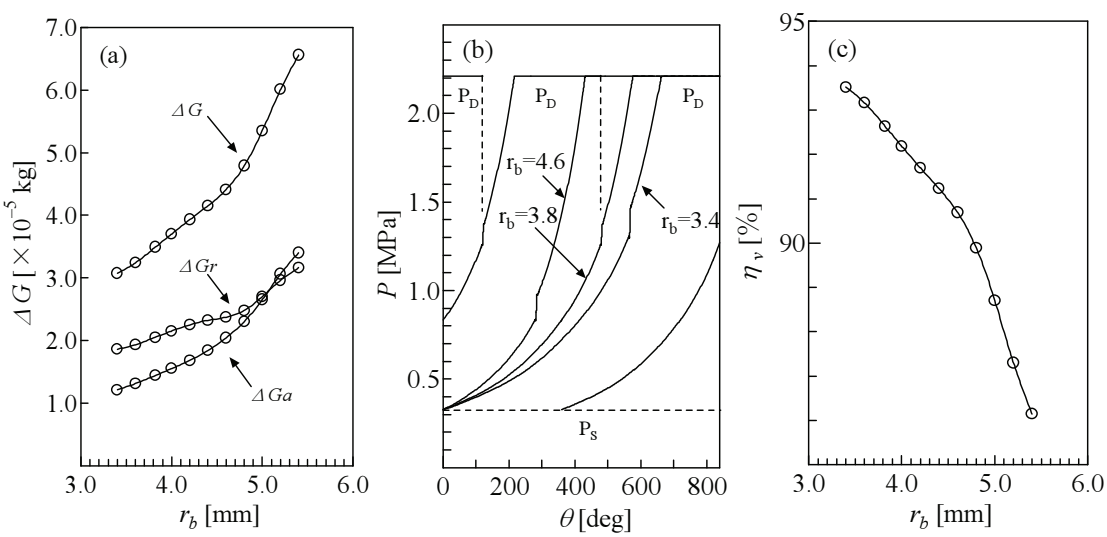

Figure 3 Calculated results: (a)refrigerant gas leakage; (b) pressure curve; (c) volumetric efficiency η_v.

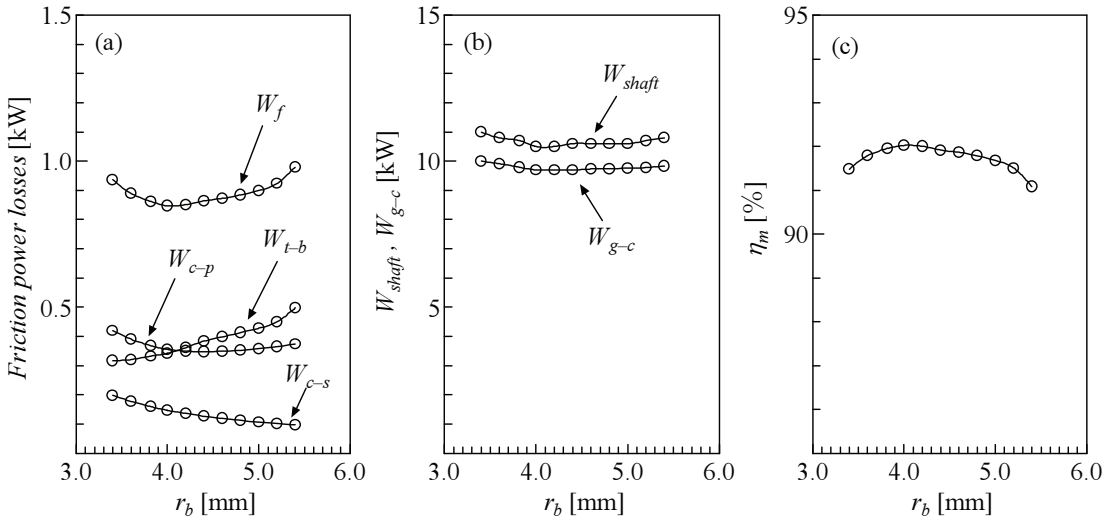

Figure 4 Calculated results: (a) friction loss power; (b) gas compression power and axial input power; (c) mechanical efficiency η_m.

First, the leakage flow velocity and leakage mass flow rate were calculated for both the axial and radial clearances. The leakage mass flow rate ΔG for one cycle of orbiting motion is shown in Figure 3(a), in which the abscissa is the orbiting radius r_b. As r_b increases, the pressure difference between the suction chamber and the inner compressed chamber increases, as shown in Figure 3(b), thus resulting in an increase in the refrigerant gas leakages through the radial and axial clearances, ΔG_r and ΔG_a. The resultant total refrigerant gas leakage ΔG increases from 3.1×10^{-5} kg to 6.6×10^{-5} kg as r_b increases from 3.4 mm to 5.4 mm, and results in a corresponding decrease in volumetric efficiency from its maximum value of 93.5% at r_b =3.4 mm to 86% at r_b =5.4 mm, as shown in Figure 3(c).

Figure 4(a) shows the calculated friction power losses. As the orbiting radius r_b increases, the friction loss W_{c-p} at the crankpin and W_{c-s} at the crankshaft decrease gradually, since the wrap height decreases and, hence, the gas loads on the crankpin and crankshaft decrease. To the contrary, as r_b is increased, the friction loss W_{t-b} at the thrust slide-bearing increases, because the chamber bottom area increases and, hence, the gas thrust force on the thrust slide-bearing increases. The resultant friction loss W_f exhibits a convex trend, initially decreasing, then increasing. Figure 4(b) shows the gas compression power, W_i, and the shaft input power, W_s. From these results, the mechanical efficiency η_m can be obtained as shown in Figure 4(c), in which the mechanical efficiency η_m exhibits its maximum

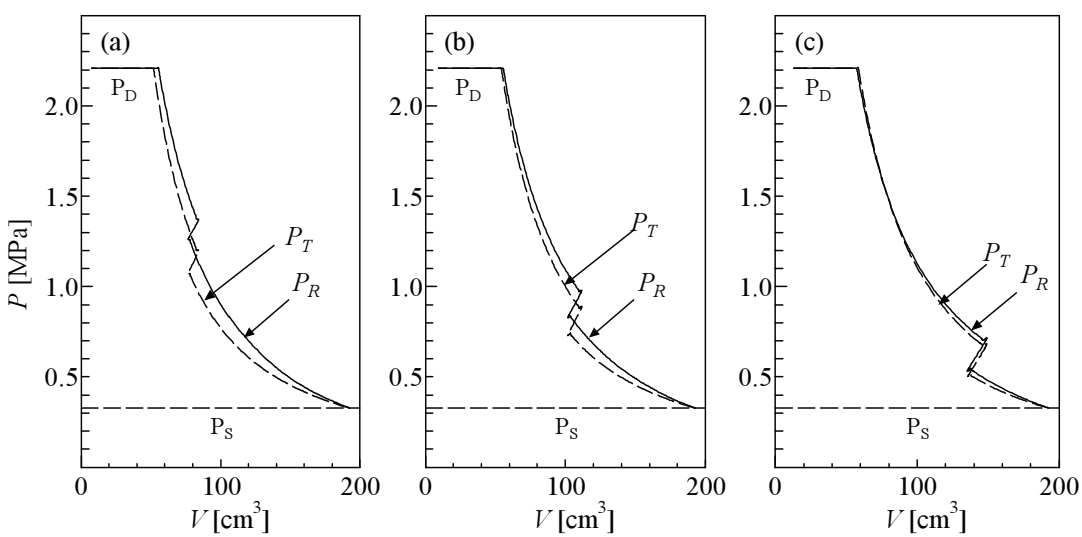

Figure 5 P-V diagram of compression chamber: (a) r_b=3.8 mm; (b) r_b =4.6 mm; (c) r_b =5.4 mm.

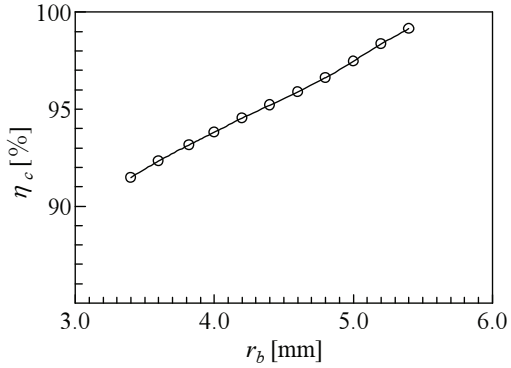

Figure 6 Compression efficiency η_c.

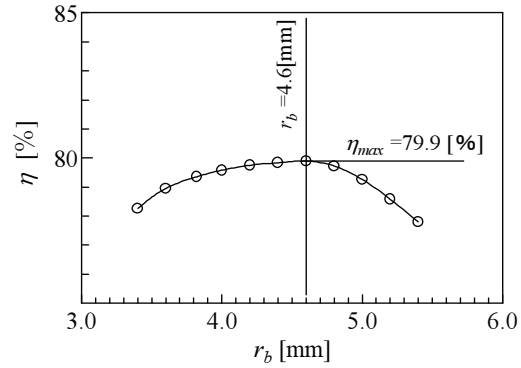

Figure 7 Overall efficiency η.

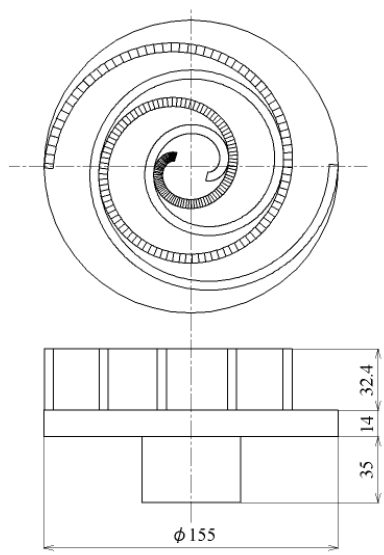

Figure 8 Optimal profile of scroll wrap.

value of 92% at r_b=4.0mm.

The P-V diagrams for r_b=3.8, 4.6, 5.4 mm are shown in Figures 5(a), (b) and (c), respectively, in which the theoretical gas pressure P_T is plotted by the dashed line and the actual gas pressure P_R by the solid line. The sudden increase in pressure, that occurs as the inner chamber conncects to discharge chamber was calculated by Dalton's Law. From these P-V diagrams, the compression efficiency η_c can be calculated, as shown in Figure 6, in which η_c increases with increasing r_b and approaches 100% at r_b=5.4 mm. The value of the compression efficiency is governed predominantly by the in-flow leakage from the higher pressure compression chamber, which has a far larger effect that due to leakage out-flow to the suction chamber for the small r_b range.

Finally, the overall efficiency η can be calculated by Eq. (7), as shown in Figure 7, in which η exhibits its maximum value of 79.9% at r_b=4.6 mm. The scroll wrap profile providing the maximum overall efficiency is shown in Figure 8, where the scroll height was 32.4 mm and the aspect ratio was 0.21.

4. DEVELOPED AMMONIA SCROLL COMPRESSOR

The high pressure ammonia scroll compressor, developed based on the identified optimal scroll wrap dimensions, is shown in Figure 9. The refrigerant oil is contained in the lower shell region and is pumped up with a trochoidal pump installed on the end of the crankshaft through a hole in the crankshaft to lubricate the compression mechanism.

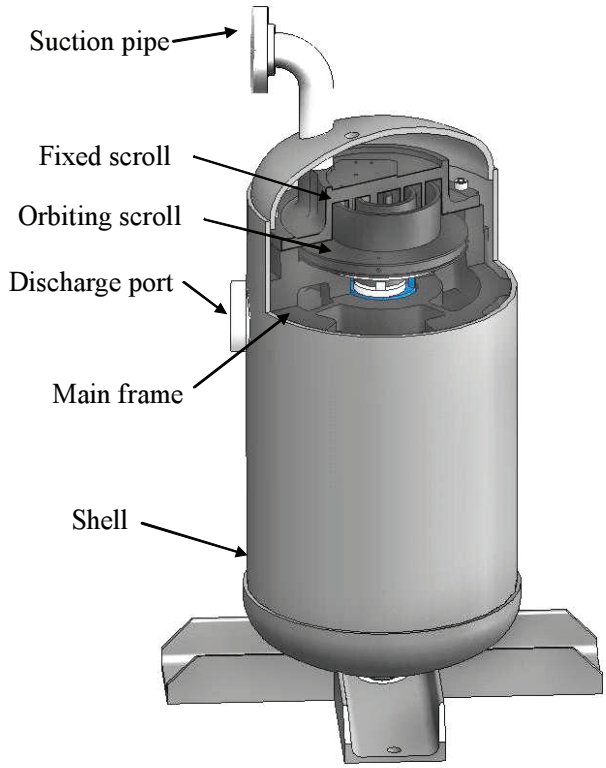

Figure 9 Manufactured high pressure ammonia scroll compressor.

The compression mechanism is driven by a high performance 15 kW IPM (Interior Permanent Magnet) motor with an aluminum coil. This IPM motor provides high power with small space requirements. All materials in the scroll compressor were carefully chosen to resist the corrosive effects of the ammonia. The design pressure is up to 2.6 MPa corresponding to a condensation temperature of 55°C. The suction pipe is directory connected to the suction chamber to avoid heating the suction gas. The compressed gas is cooled by liquid injection and discharged into the compressor shell to separate the refrigerant oil and to cool the motor, and then discharged through discharge port positioned at the side of shell.

As a result, an ammonia scroll compressor with a high COP was successfully developed and entered the markets in 2008.

5. CONCLUSION

Efficiency calculations of an ammonia scroll compressor were undertaken to determine the optimal design values for involute base circle radius and scroll height for a fixed cylinder diameter of 155 mm. The condensation temperature, evaporation temperature and suction volume were fixed at 55°C, 0°C and 192.5 cm^3, respectively. The ammonia leakage flow through axial and radial clearances between the fixed and orbiting scrolls was calculated with application of the friction factor for CO_2 gas leakage to obtain the volumetric and compression efficiencies, whereas the friction losses were calculated to determine the mechanical efficiency. As a result, the overall efficiency of 79.9% was found for the involute base circle radius of 4.6 mm. The scroll wrap height and aspect ratio were 32.4 mm and 0.21, respectively. Finally, a high pressure ammonia scroll compressor has been manufactured based on the obtained scroll wrap dimensions and possesses a higher COP than the conventional compressor.

In the present efficiency simulations, it is assumed that ammonia leakage is can be calculated using friction factors for dry CO2 gas leakage. In the near future, leakage tests for ammonia will be performed to determine precisely the appropriate friction factor for ammonia and then incorporated into the analysis to ensure the validity of the present simulation of efficiency.

NOMENCURATURE

B	Wrap height	(mm)	Q, Q_e, Q_{th}	Leakage mass flow rate	(kg/s)
D	Cylinder diameter	(mm)	r_b	Involute base circle radius	(mm)
E, E_{th}	Gas compression energy	(W)	t	Wrap thickness	(mm)
f_{x1}, f_{x2}	Friction force at fixed slot of Oldham ring	(N)	V	Suction volume	(cm^3)
f_{y1}, f_{y2}	Friction force at Oldham ring	(N)	W_f	Frictional loss energy	(W)
f_{t1}, f_{t2}	Friction force at thrust bearing	(N)	W_i	Gas compression energy	(W)
G	Refrigerant mass	(kg)	W_s	Shaft input energy	(W)
I_0	Moment of inertia of crankshaft	($kg \cdot m^2$)	δ_a , δ_r	Axial and radial clearance	(μm)
L_Q	Friction torque at crankshaft bearing	(N·m)	η	Overall efficiency	(-)
			η_c	Compression efficiency	(-)
L_s	Friction torque at crankpin	(N·m)	η_m	Mechanical efficiency	(-)
m_o	Oldham ring mass	(kg)	η_v	Volumetric efficiency	(-)
m_s	Orbiting scroll mass	(kg)	λ_a, λ_r	Friction factor	(-)
N	Motor drive torque	(N·m)			

REFERENCES

Oku, T., Ishii, N., Knisely, C.W., Sawai, K. and Aya, T., 2006, Leakage Tests of Wet CO_2 Gas with Oil-Mixture in Scroll Compressors and Its Use in Simulations of Optimal Performance, *International Compressor Engineering Conference at Purdue*, C127.

Oku, T., Anami, K., Ishii, N., Knisely, C.W., Yasuda, K., Sawai, K., Sano, K. and Morimoto, T., 2005, Gas Leakage in CO_2 and R22 Scroll Compressors and Its Use in Simulations of Optimal Performance, *International Conference On Compressors And Their Systems 2005*, pp.403-412.

Ishii, N., Yamamoto, S., Sano, K., Sawai, K., Hiwata, A., Nakamoto, T. and Kawano, H., 2002a, Efficiency Simulations of a Compact CO_2 Scroll Compressor and Its Comparison with Same Cooling Capacity R410A Scroll Compressor, *International Compressor Engineering Conference at Purdue*, C22-2.

Ishii, N., Kawamura, S., Yamamoto, S., Sawai, K., Hiwata, A., Nakamoto, T., Kawano, H. and Ting, K.S., 2002b, Efficiency Simulations with Consideration of Heat Losses of R410 Compact Scroll Compressor for Its Optimal Performance, *International Compressor Engineering Conference at Purdue*, C22-3.

Ishii, N., Bird, K., Sano K., Oono, M., Iwamura S. and Otukura T., 1996a, Refrigerant Leakage Flow Evaluation for Scroll Compressors, *International Compressor Engineering Conference at Purdue*, Vol. II, pp.633-638.

Ishii, N., Sakai, M., Sano, K., Yamamoto S. and Otokura T., 1996b, A Fundamental Optimum Design for High Mechanical and Volumetric Efficiency of Compact Scroll Compressors, *International Compressor Engineering Conference at Purdue*, Vol. II, pp.639-644.

Ishii, N., Yamamoto, S., Muramatsu, S., Yamamura, M. and Takahashi, M., 1992, Optimum Combination of Parameters for High Mechanical Efficiency of a Scroll Compressor, *International Compressor Engineering Conference at Purdue*, pp.118a1-118a8.

ACKNOWLEDGEMENT

The authors would like to express their sincere thanks to Mr. Kiyoshi Sawai, Manager, Mr. Takashi Morimoto, Manager and Mr. Noboru Iida, Chief Engineer, Appliance Development Center, Corporate Engineering Division, Matsushita Home Appliances Company, the Matsushita Electric Industrial Co., Ltd., for their active support to the present study, and to Mr. Shota Ueda, Mayekawa MFG. Co., Ltd., for his active contribution in assiduously conducting the present computer simulations.