Purdue University
Purdue e-Pubs

International Compressor Engineering Conference | School of Mechanical Engineering

2008

Study of a Novel Compliant Suspension Mechanism in Low Side Type Scroll Compressor

Yuehju Tang
National Chiao Tung University

Chinghua Hung
National Chiao Tung University

Yuchoung Chang
Industrial Technology Research Institute

Follow this and additional works at: http://docs.lib.purdue.edu/icec

Tang, Yuehju; Hung, Chinghua; and Chang, Yuchoung, "Study of a Novel Compliant Suspension Mechanism in Low Side Type Scroll Compressor" (2008). *International Compressor Engineering Conference.* Paper 1886.
http://docs.lib.purdue.edu/icec/1886

This document has been made available through Purdue e-Pubs, a service of the Purdue University Libraries. Please contact epubs@purdue.edu for additional information.
Complete proceedings may be acquired in print and on CD-ROM directly from the Ray W. Herrick Laboratories at https://engineering.purdue.edu/Herrick/Events/orderlit.html

Study of a Novel Compliant Suspension Mechanism in Low Side Type Scroll Compressor

YUEH-JU TANG*[1], YU-CHOUNG CHANG[2], CHINGHUA HUNG[1]

[1] Department of Mechanical Engineering, National Chiao Tung University
EE437, 1001 Ta Hsueh Rd., Hsinchu, TAIWAN
(Tel: 886-3-5712121#55160, E-mail: JoshYJTang@itri.org.tw)

[2] EEL, Industrial Technology Research Institute
Rm. 408C, Bldg. 64, 195-6, Sec. 4, Chung Hsing Rd.,Chutung, Hsinchu, TAIWAN
(Tel: 886-3-5913367, E-mail: yuchoung@itri.org.tw)

ABSTRACT

This paper presents a novel compliant mechanism that combines a fixed ring with two leaf springs as suspension on fixed scroll in a low side type scroll compressor. With the consideration of dynamic balance of forces acting on fix scroll, the prototype has been developed. This paper also analyzes the leaf spring thickness design that makes the constraint of the floating behavior in axial direction of the fixed scroll, and is helpful in maintaining dynamic inner axial forces balance. The prototype experimental result shows that this novel design can offer the needed balance and could ensure high volume efficiency, low noise and less power consumption during compression process.

1. INTRODUCTION

In recent years power saving has become a critical factor when designing compressors, especially in air conditioner and refrigerator Industries. For the advantage of power saving, the variable frequency control of compressor has spurred a great deal of research into the behavior of scroll pump's leakage (The leakage of scroll pump could decrease the cooling capacity.) under various operation conditions. On the research of high side scroll compressor, Tojo et al. (1986) has proposed a self-adjusting back-pressure mechanism. Suefuji et al. (1992) has presented a method of calculating hermetic scroll compressor performance using a simplified thermal analysis model. Bush et al. (1992) has discussed the stability characteristic of the back-pressure supported orbiting scroll. Marchese (1992) have discussed the dynamics of the orbiting scroll with axial compliance.

As for the research of low side scroll compressor, Lee et al. (1996) has proposed an optimum axial compliance mechanism for the low side type scroll compressor which can increase 15% efficiency under fixed operation frequency. Park, et al. (2002) has discussed the thermodynamic analysis on the performance of a variable speed scroll compressor with refrigerant injection. But there was no discussion about the axial compliance mechanism.

However, there is only little research presented and little information available for developing an axial-compliant mechanism for the tip leakage of scrolls on low side scroll compressor, especially under low operation frequency.

The study presented here is of a novel compliant suspension mechanism in low side type scroll compressor (see Fig.1). This mechanism which combined a fix ring and two leaf springs can provide the function to prevent the scroll tip leakage under low operation frequency. Normally, fixed and orbiting scrolls in low side type scroll compressor are subjected to the unbalance forces and moments that could cause the scroll plate to atilt, and causes leakage, noise and extra friction wear. With suitable design, as with this novel design, the unbalance forces compliance could solve the unbalance problems on the scrolls and prevent the extra friction forces between scroll tips during variable operation frequency.

During this research analysis, several numerical methods have been adopted. For example, a finite element code (ANSYS) has been used to predict axial compliance's deformation, a home-made compressor performance simulation package has been used to calculate the gas forces for FEM boundary conditions, and an optimization on scroll tip clearance between scroll couple has been performed to design the suitable leaf spring thickness.

2. BASIC ANALYSIS

To simplify the analysis process of the above proposed new mechanism, the following basic assumptions are used:

- The fixed scroll has limited floating displacement on axial direction.
- Only four dynamic forces directly act on fixed scroll will be precisely calculated.
- The contact force between orbiting scroll and fixed scroll resulting from tilting moment on orbit scroll will be assigned to a constant value through experience.

In this study, the four dynamic forces are axial gas pressure force, leaf spring force, pressure pin force and back pressure force (see Fig. 2). During operation, the axial clearance between the fixed scroll and orbiting scroll is determined by the equilibrium of forces. The resultant force will push on the fixed scroll, and then made the fixed scroll contact with the orbiting scroll. This will cause friction force and unnecessary mechanical loss especially in low operation speed.

Back Pressure Force

The back pressure force is the resultant force caused by the discharge gas pressure acting on check valve, and it can be calculated from the following equation.

$$F_b = P_d \cdot A \qquad (1)$$

Where F_b is the force acting on the check valve, P_d is the discharge gas pressure from the back-pressure chamber, and A is the cross sectional area of the check valve.

Pressure Pin Force

The pressure pin force comes from the pressure difference between suction gas and discharge gas in high back pressure chamber acting on the pressure pin surface plus the fixed disk spring downward force. It is calculated from

the equation:

$$F_{pin} = (F_{disk} + F_{pd}) \times 3 \qquad (2)$$

Where F_{disk} is the disk spring force, F_{pd} is the net forces resulted from pressure difference between suction gas and discharge gas in high backpressure chamber and acting on the pressure pin surface. Totally three pins are considered.

Axial gas force

The axial gas force is caused by the pressure distribution over the compression chambers between the fixed and orbiting scrolls. The axial force acting on fixed scroll is calculated from the equation:

$$F_g = P_d \times A_d + P_m \times A_m + P_s \times A_s \qquad (3)$$

Where F_g is the Axial gas force, P_d is the discharge pressure, P_m is the middle pressure, P_s is the suction gas pressure, A_d is the discharge chamber area, A_m is the middle chamber area and A_s is the suction chamber area.

Leaf Spring Forces

The total force caused by the displacement of the leaf spring is computed by the following equation:

$$F_s = N \times K \times X \qquad (4)$$

Where N is the number of the leaf spring, X is the displacement of leaf spring, and K is the spring stiffness.

During scroll operation, a tilting moment is exerted on the orbiting scroll which can result in a contact force to the fixed scroll. The contact force is a major cause of the reduction of the compression efficiency and the increase of noise level. The resultant four dynamic forces needed to be designed properly to retain stable motion. This can be achieved by satisfying the following conditions.

$$F_b \geq (F_g + F_{tx}) \qquad (5)$$

Where F_{tx} is the contact force. The value of F_{tx} is hard to precisely calculate. In general compressor design, an initial guess value will be assigned from experience.

3. PROTOTYPE

In order to design the thickness of leaf spring used in the prototypes, the finite element simulation package (ANSYS) has been employed to calculate the axial displacement of leaf spring. (See Fig. 3) The active forces which were calculated from compressor performance simulation software (developed by ITRI) have been introduced to be boundary conditions. The material of leaf spring in FEM model is SKD11 steel, scrolls are FC300 cast iron, and

fixed ring for fixed scroll is AISI 1040 steel. All screws' material has been set to SCM435 steel. The finite element model was shown in Fig. 4. And one of the simulation results was shown in Fig. 5. According to the FEM analysis result, the leaf spring prototype has been fabricated to three different thicknesses (0.5mm, 1.0mm and 1.5mm) for further analysis. The compliance structure prototype was pictured in Fig.6.

3. EXPERIMENT

For comparing the influence of different back clearance between scrolls, a preliminary experiment has been conducted by controlling the clearance of the prototype from 0.03mm to 0.05mm using a bolted case scroll compressor (as shown in Fig. 1). This experiment has been taken place in a compressor performance testing room (in ITRI) and the operation condition follows ARI550/590 standard. A verification experiment has also been conducted for the better understanding of the compressor power consumption under low operation frequency with our new axial compliance mechanism. In this experiment, three types of leaf spring design were tested and the compressor speed was varying from 50Hz (~3000rpm) to 34Hz (~2040rpm). In Fig. 7, leaf spring1 is 1.5mm in thickness, leaf spring 2 is 1.0mm in thickness and leaf spring 3 is 0.5mm in thickness.

5. RESULTS and DISCUSSIONS

Results

(1) In the back clearance test, the back clearance (from 0.03mm to 0.05mm) shows influence on the power consumption and the noise level (see Table 1).

(2) As the back clearance increased, the power consumption is decreased. From the test result of prototype, it shows that 11.7% power consumption saving could be achieved (see Table 1).

(3) The compliance mechanism effectively controlled the axial floating motion of the fixed scroll. From the result of the low operating speed test, the power consumption are getting lower and could be reduced to 1.4kw.(see Fig. 7)

(4) The effect of the thickness of leaf springs has been shown in Fig.7. With the increase of thickness, the operating range was reduced and high power was taken place.

(5) When prototype runs with 0.5mm leaf spring, the cool capacity range could be wilder (5576 kcal/hr~3655kcal/hr). (see Fig.8)

Discussions

(1) The dynamic back pressure in the back chamber could be increased under certain operation conditions. And this will cause increasing forces act on fixed scroll back plate. In this situation, back clearance controlling method will work.

(2) The axial motion of the fixed scroll becomes stable with constraint of fixed ring, therefore, back clearance can be controlled by leaf spring's rigidity.

(3) The fixed scroll could be tilted in the normal operating; this tilting motion could cause the deterioration of the compressor efficiency in a scroll compressor. The tracing action of fixed scroll to orbiting scroll could decrease

tilting motion contact effect. This calls for further experimental analyses.

(4) More studies with extra low operation speeds of compressor should be conducted to obtain more useful information in order to promote this axial compliance mechanism.

6. CONCLUSIONS

In this paper a compliance suspension mechanism with a fix ring and two leaf springs have been proposed for low side type scroll compressor, and compressor performance measurement for the prototype has been conducted. The following conclusions are obtained.

- Back clearance can influence the leakage of scroll tips. In this study, the back clearance maintaining at 0.05mm could increase the volume efficiency by 3%.
- The choice of the thickness of leaf spring can change the leaf spring's rigidity. In this study with 0.5mm thickness, the operating speed range can be increased to 2.4 times greater than that of 1.5mm thickness.
- With this prototype, the suspension compliance mechanism functions well when the scroll compressor was under the operation speed of 50Hz (~3000rpm) to 34Hz (~2040rpm), and it effectively controls the back clearance which results in low power consumption.

REFERENCES

Kenji Tojo, Masato Ikegawa, Naoki Maeda, Sigeru Machida, Masao Shiibayashi and Naoshi Uchikawa., 1986, "Computer Modeling of Scroll Compressor with Self Adjusting Back-Pressure Mechanism", *Proc. of International Compressor Engineering Conference at Purdue, pp. 872-885*

Kazutaka Suefuji, Masao Shiibayashi and Kenji Tojo, 1992, "Performance Analysis of Hermetic Scroll Compressor", *Proc. of International Compressor Engineering Conference at Purdue, pp. 75-84*

James W. Bush, David K. Haller, Chrisopher R. Galante, 1992, "General Stability and Design Specification of the Back-Pressure supported Axially Compliant Orbiting Scroll", *Proc. of International Compressor Engineering Conference at Purdue, pp. 853-860*

Anthony J. Marchese, 1992, "Dynamics of an Orbiting Scroll with Axial Compliance, Part 2 Experimental Techniques", Proc. of International Compressor Engineering Conference at Purdue, pp. 871-882

Joonhyun Lee, Seonkyo Kim, Seungkap Lee and Yoonser Park, 1996, "Investigation of Axial Compliance Mechanism in Scroll Compressor ", *Proc. of International Compressor Engineering Conference at Purdue, pp. 459-464.*

Youn Cheol Park, Yongchan Kim and Honghyun Cho, 2002, "Thermodynamic analysis on the performance of a variable speed scroll compressor with refrigerant injection", *International Journal of Refrigeration, Volume 25, Issue 8, December 2002, Pages 1072-1082*

ACKNOWLEDGEMENT

The authors would like to express their thanks for financial support from the Energy R&D foundation funding provided by the Energy Commission of the Ministry of Economic Affairs in Taiwan.

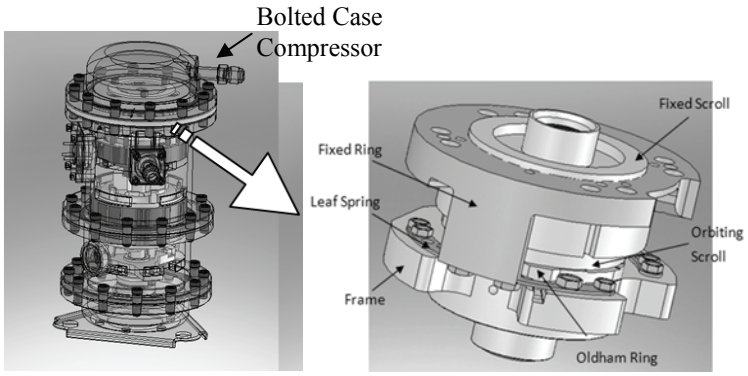

Figure1. Compliant Suspension Mechanism Concept

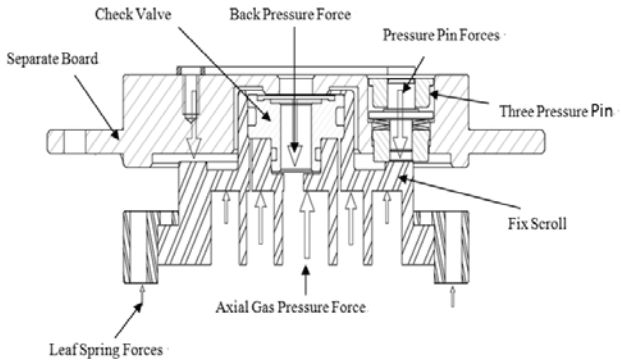

Figure2. Four Dynamic Forces act on fixed scroll.

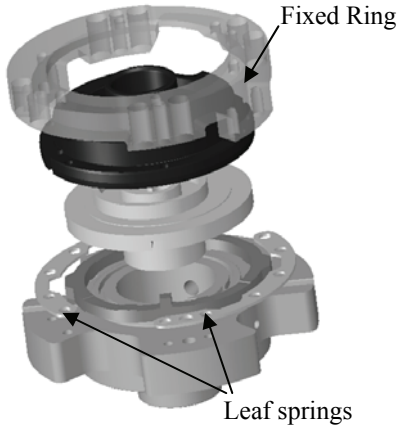

Figure3. Explosion drawing of compliance mechanism

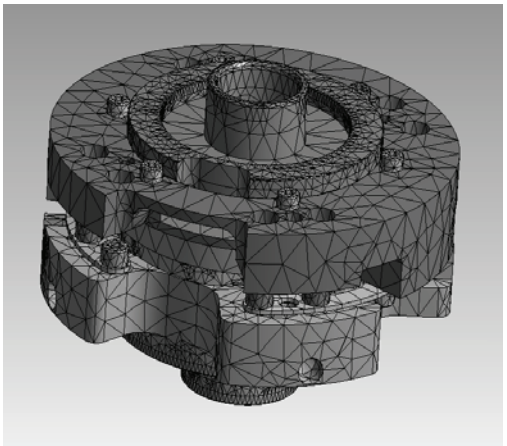

Figure 4. Finite element model

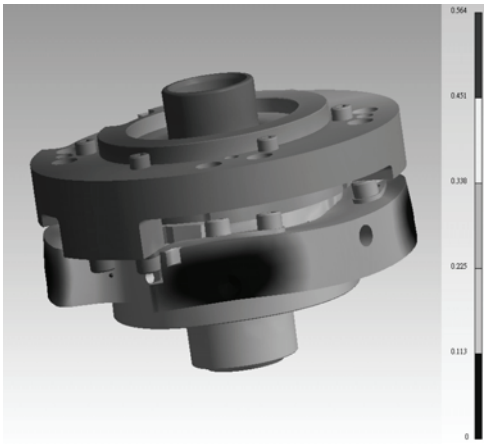

Figure5. FEM analysis result

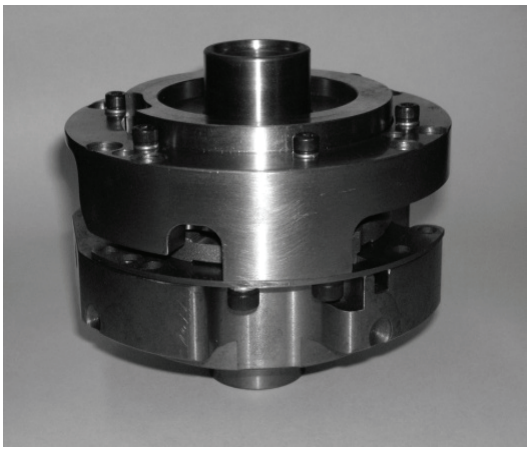

Figure6. Prototype of axial compliance mechanism

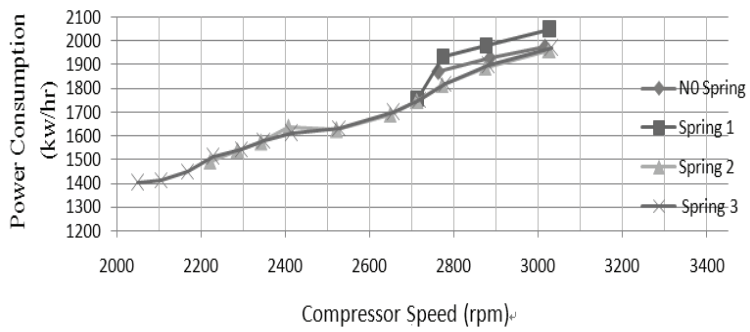

Figure7. Leaf spring thickness vs. power consumption

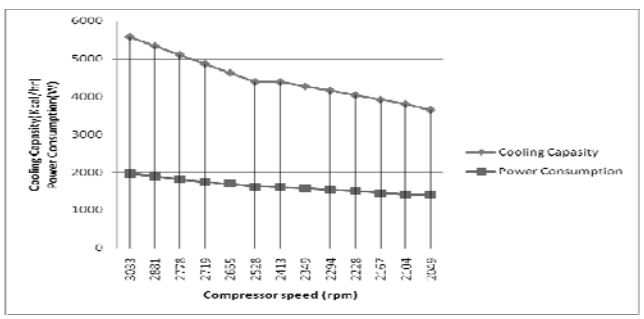

Figure8. Cooling capasity and power consumption vs. compressor speed

Table 1. Experiment result of various back clearance

Back Clearance (mm)	Power (W)	Current (A)	Cooling Capasity (kcal/h)	Noice (dBA)	Semi-Amplitude (μm)	Flow Rate (kg/hr)	Volumn (%)
0.03	2777.3	14.8	6277	65	15	153.9	89.3
0.04	2492.7	11	6603.8	64	13.8	161.9	92.4
0.05	2451.3	10.9	6590.7	61.74	12.75	161.6	92.3