Purdue University
Purdue e-Pubs

International Compressor Engineering Conference | School of Mechanical Engineering

2008

Transient Modeling and Sensitivity Analysis of a Controlled R744 Swash Plate Compressor

Peterson Cavalcante
TU Braunschweig

Sven Farsterling
TLK-Thermo GmbH

Wilhelm Tegethoff
TLK-Thermo GmbH

Norbert Stulgies
TU Braunschweig

Jürgen Köhler
TU Braunschweig

Follow this and additional works at: http://docs.lib.purdue.edu/icec

Cavalcante, Peterson; Farsterling, Sven; Tegethoff, Wilhelm; Stulgies, Norbert; and Köhler, Jürgen, "Transient Modeling and Sensitivity Analysis of a Controlled R744 Swash Plate Compressor" (2008). *International Compressor Engineering Conference.* Paper 1880.
http://docs.lib.purdue.edu/icec/1880

This document has been made available through Purdue e-Pubs, a service of the Purdue University Libraries. Please contact epubs@purdue.edu for additional information.
Complete proceedings may be acquired in print and on CD-ROM directly from the Ray W. Herrick Laboratories at https://engineering.purdue.edu/Herrick/Events/orderlit.html

Transient Modeling and Sensitivity Analysis of a Controlled R744 Swash Plate Compressor

*Peterson Cavalcante[1], Sven Försterling[2], Wilhelm Tegethoff[2], Norbert Stulgies[1], Jürgen Köhler[1]

[1] *TU Braunschweig, Institut für Thermodynamik,*
Hans-Sommer-Straße 5, D-38106 Braunschweig, Germany

[2] *TLK-Thermo GmbH,*
Hans-Sommer-Straße 5, D-38106 Braunschweig, Germany

ABSTRACT

The focus of this investigation is the development of an advanced transient model to describe the operation of a controlled swash plate compressor for an automotive air-conditioning system using the natural refrigerant R744. The over-all model consists of several partial models, that describe the thermodynamic laws in the control volumes of the cylinders, the suction and discharge chamber as well as the crankcase, the heat transfer, the dynamics and friction of the swash plate and the pistons, the valve behavior, the piston leakage and the control valve mass flows. Based on measured data from the literature a validation is carried out under stationary full load operation conditions. The main focus of this investigation and the achieved progress compared to the state-of-the-art are the simulative linkage of the sub models in one complete model: the dynamic modeling of pistons and swash plate taking into account the impact of each individual piston on each other. An extensive sensitivity analysis was carried out to achieve a better understanding of the over-all compressor model behavior. Based on this analysis, the model and geometric parameters with a significant impact on the main model's variables and efficiencies were identified in each sub model. A subsequent goal is the generation of a compressor characteristic to provide compressor efficiencies for cycle simulations.

1. INTRODUCTION

In the last years a renaissance of supercritical vapor compression cycles (so called transcritical cycles) using carbon dioxide as a refrigerant took place. One important part of current investigations is the further development of compressors for carbon dioxide applications (e.g. Försterling, 2004). A variety of compressor types have been developed and tested like reciprocating compressors, rolling piston compressors, scroll compressors, wobble-plate and swash-plate compressors. In order to achieve high compressor efficiencies, low production costs measurements at test rigs, comparative studies and the development of simulation models are of great importance to optimize the compressor efficiencies and functions in particular concerning the transient behaviour.

This paper presents a new comprehensive approach of a transient simulation model for a controlled swash plate compressor. The over-all model consists of several partial models, that describe the thermodynamic laws in the control volumes of the cylinders, the suction and discharge chamber as well as the crankcase, the heat transfer, the dynamics and friction of the swash plate and the pistons, the valve behavior, the piston leakage and the control valve mass flows. Based on measured data from the literature a validation is carried out under stationary full load as well as for for dynamic operation conditions. Main focus of this simulation is a sensitivity study to investigate the influence of a variety of compressor parameters on different variables like compressor mass flow, power and the compressor efficiencies. In the literature a variety of publications on detail compressor issues as e.g. mass transport, heat transfer and mechanics can be found: in particular about kinematics and dynamics (see Tojo (1988), Jørgensen (1998), Lou (2005), Tian (2004)), valve behaviour (see Touber (1976)) and leakage influence (see Liu (1984) and Süß (1998)). Mathematical models that describe those phenomena are already available. However, there is no published model that describes the over-all behavior of a R744 axial piston compressor. There is no dynamic Model so far available describing the dynamics for several pistons simultaneous in connection with the swash plate mechanism using a model for the mass transport and valve dynamics for each cylinder chamber. There is also a lack of literature studies about systematic sensitivity analyses for axial piston compressors with the aim to identify the significant physical effects and relevant physical motivated parameters.

2. MODELING OF A SWASH PLATE COMPRESSOR

In the over-all model, the compressor can be described in terms of three different processes (Figure 1). The processes correspond to physical phenomena, which are described by mathematical equations with different types of time constants. These equations are implemented into computer code and solved numerically. Finally, defining an input for this model such as suction pressure p_S, discharge pressure p_D and speed n it is possible to simulate this model and obtain transient results for mass flows, power consumption and compressor efficiencies.

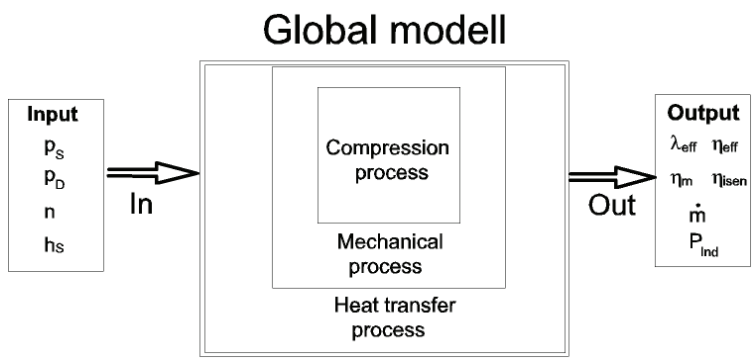

Figure 1: Schematic diagram of the simulation model.

A brief description of the global model is presented in the following sections, which consists of the sub-models for mass transport, pressure loss and leakage, friction, heat transfer, kinematics and dynamics of the swash plate mechanism.

2.1 Thermodynamic Model

The thermodynamic model is made up by the following partial-models for the n compression chambers, the suction and discharge chamber and crankcase, the pressure drops and leakage as presented in Figure 2. For the modeling of each chamber is a one dimensional nodal model used. The control loop of the compressor represented by the system consisting of crankcase, the compressor control valve at the discharge side and a capillary tube at the suction side controls the crankcase pressure and therewith the position of the swash-plate. In this work the thermodynamic state of each chamber is defined by the two state variables temperature T and density ρ. For the mathematical description of each chamber both the mass balance and energy balance can be formulated using these two variables.

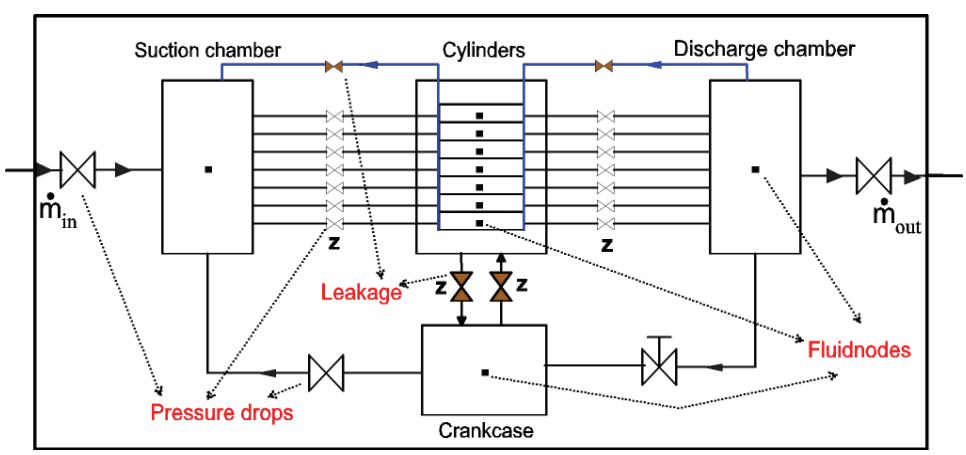

Figure 2 : Schematic diagram of the thermodynamic compressor model.

The mathematical model used for the simulation of the different fluid chambers is discussed in Hafner (1990) and Prakash (1974). The first law of thermodynamics (see e.g. Köhler (2002)) for all the different chambers with the control volume V_{CV} can be described as shown below:

$$\frac{d}{dt}\int_{V_{CV}} \rho\left(u+\frac{w^2}{2}+\Psi\right) dV \;=\; \sum_k \left[\dot{m}\left(h+\frac{w^2}{2}+\Psi\right)\right]_k + \dot{Q} + \dot{W}_{CV} - p\frac{dV_{CV}}{dt} \tag{1}$$

The volume in the chambers can be considered as homogeneous, which means that the thermodynamic state variables pressure, temperature, density, internal energy and enthalpy are constant within the chambers and only depend on time, but not on location. Finally, the speed of the mass flow of the fluid and the piston and gravity are negligible. Taking in account the above assumptions and using adequate thermodynamic refrigerant properties it is possible rewrite the equation as shown below:

$$\begin{aligned}\frac{dT(t)}{dt} \;=\; & \left(\frac{1}{\rho(t)V(t)c_V(T,\rho)}\right)\left(\sum_j \dot{m}_j\cdot h_j(t) - \frac{dm_{CV}(t)}{dt}\Big(h(T,\rho)-\frac{p(T,\rho)}{\rho(t)}\Big) + \right.\\ & \left. + \frac{V(t)}{\rho(t)}\Big(\frac{\beta(T,\rho)T}{\kappa(T,\rho)} - p(T,\rho)\Big)\cdot\frac{d\rho(t)}{dt} + \dot{Q}(t) - p(T,\rho)\frac{dV_{CV}}{dt}\right) \quad .\end{aligned} \tag{2}$$

Equation 2 can be used for all chambers but it is necessary to remind that chambers with variable control volume as the cylinders and the crankcase contain the term with the derivative of volume. Similar to energy conservation law, the mass balance for the control chamber can be defined as in the following equation:

$$\frac{d}{dt}\int_{V_{CV}} \rho\, dV \;=\; -\int_{A_{CV}} \rho\, w_j\, n_j\, dA \tag{3}$$

For a homogeneous mass distribution in the chamber and taking into account the defined mass flows of the control volume border should be specified that the numerical values are always positive for incoming masses. In addition, using the mass relationship in the control volume and its derivative with mass balance the state equation of the density can be written as follows:

$$\frac{d\rho(t)}{dt} \;=\; \frac{1}{V(t)}\cdot\Big(\frac{dm_{CV}(t)}{dt} - \rho(t)\cdot\frac{dV(t)}{dt}\Big) \tag{4}$$

Equation 4 can be used in all chambers at the compressor model regardless whether the volume remains constant or variable. The mass flow rate between the chambers and through the different compressor valve types is calculated together with the pressure drop using the semi empiric approach based on the Bernoulli-equation (see Böswirth (2002) and Touber (1976)):

$$\dot{m}(\Delta p) = K_{flow}\cdot\sqrt{2\cdot\varrho_{in}\cdot(p_{in}-p_{out})} \quad with \quad K_{flow} = \alpha\cdot\epsilon\cdot A_0 \tag{5}$$

The leakage mass flow rate via the piston rings and the closed valves is modeled using a similar flow approach (see Liu (1984)). To make a good compromise between computing efforts and accuracy in this work is used a relatively simple valve model that describes the pressure drop without calculating the valve reed movement in detail.

2.2 Heat transfer model

The sub-model describing the compressor heat transfer is realized as a resistance network basically consisting of components like thermal resistances, nodes such solid, fluid and contact nodes, thermal capacities and thermal sources and prescribed temperatures. The heat transfer components include the heat transfer between the cylinder block and cylinder wall and the heat transfer through the various walls between the chambers and environment (see for instance Liu (1984), Suess (1998), Böswirth (1998) and Fagotti (1998)). The thermal resistors represent the heat transfer according to heat conduction, convection and radiation. The nodes represent components with similar temperature in metal, refrigerant as well as in wear points like the bearings and the cylinder rings. The generated friction heat is part of the model and added to the contact nodes using the appropriate thermal sources. The contact nodes are located between the solid or fluid nodes. The following compressor friction losses are considered in the model: friction between the drive shaft and bearings, the friction losses caused by the friction between piston and cylinder wall and respectively between pistons and slid shoes or between slid shoes and plate and drive shaft.

2.3 Kinematic and dynamic model

The mechanical model covers the kinematics and dynamics of the swash plate mechanism. This mechanism has been implemented using important variables and main geometric parameters such as R_{TK} – radius between cylinders and α – the swash plate angle. Using this variables and geometric parameters a set of equations describing the functionality of the main components of the swash plate mechanism like swash plate, pistons and drive shaft is defined. The kinematical analysis of the piston takes into account the linear acceleration of the piston in z-direction that is a function of the swash plate angel, velocity, acceleration and time:

$$\ddot{z}_P = \overrightarrow{f}\left(\alpha(t), \dot{\alpha}, \ddot{\alpha}, t\right) \tag{6}$$

The linear acceleration of the piston in z-direction can be calculated using the second derivative of the piston stroke function:

$$\begin{aligned} \ddot{z}_P \;=\; & R_{PC}\Bigg\{\left[\frac{1}{\cos^2\left(\alpha(t)\right)}\right]\Bigg[2\tan\left(\alpha(t)\right)\dot{\alpha}^2\Big(1-\cos\left(\varphi_P(t)\right)\Big) + \\ & + \ddot{\alpha}\Big(1-\cos\left(\varphi_P(t)\right)\Big) + 2\dot{\alpha}\sin\left(\varphi_P(t)\right)\dot{\varphi}_{DS} + \\ & + \tan\left(\alpha(t)\right)\Big(\cos\left(\varphi_P(t)\right)\dot{\varphi}_{DS}^2 + \sin\left(\varphi_P(t)\right)\ddot{\varphi}_{DS}\Big)\Bigg]\Bigg\} \end{aligned} \tag{7}$$

The angular acceleration of the swash plate angle can be expressed by the ratio of the torque as follows:

$$\alpha = \overrightarrow{f}\left(M_P(z_P), t\right) \qquad \ddot{\alpha} = \frac{M_{SW^{\circ}_{balance}}}{I_{xx}} \tag{8}$$

2.4 Verification and validation

The verification process of the compressor model has been made iteratively. The validation of Compressor model is accomplished due the use of provided data from the literature (see Magzalci (2005)). The available data were generated with a compressor test rig at different pressures, speeds under full load conditions.

3. PROGRAMMING AND SIMULATING USING MODELICA

Modelica/Dymola (Elmqvist, 1998) was used for the programming of the compressor program. Modelica is a equation based and object-oriented language to solve differential algebraic equation systems (DAE systems) (Tegethoff, 2006). The language Modelica in combination with the working environment Dymola (Dynasim AB, 2005) was already used in different areas of the R744 system simulation, in particular for dynamic simulation of air conditioning systems (see Pfafferot (2000), Tummescheit (2005) and Lemke (2006)). Figure 3 shows the underlying class diagram of the compressor model to give an idea about the whole model architecture.

4. SENSITIVITY ANALYSIS

An extensive sensitivity analysis was carried out to achieve a better understanding of the over-all compressor model behavior. Based on this analysis, the model and geometric parameters with a significant impact on the main model's variables and efficiencies were identified in each sub model. The sensitivity analysis was carried out defining a set of result variables Y (listed in the first column of Table 1) and parameters (listed in the other rows of Table 1).

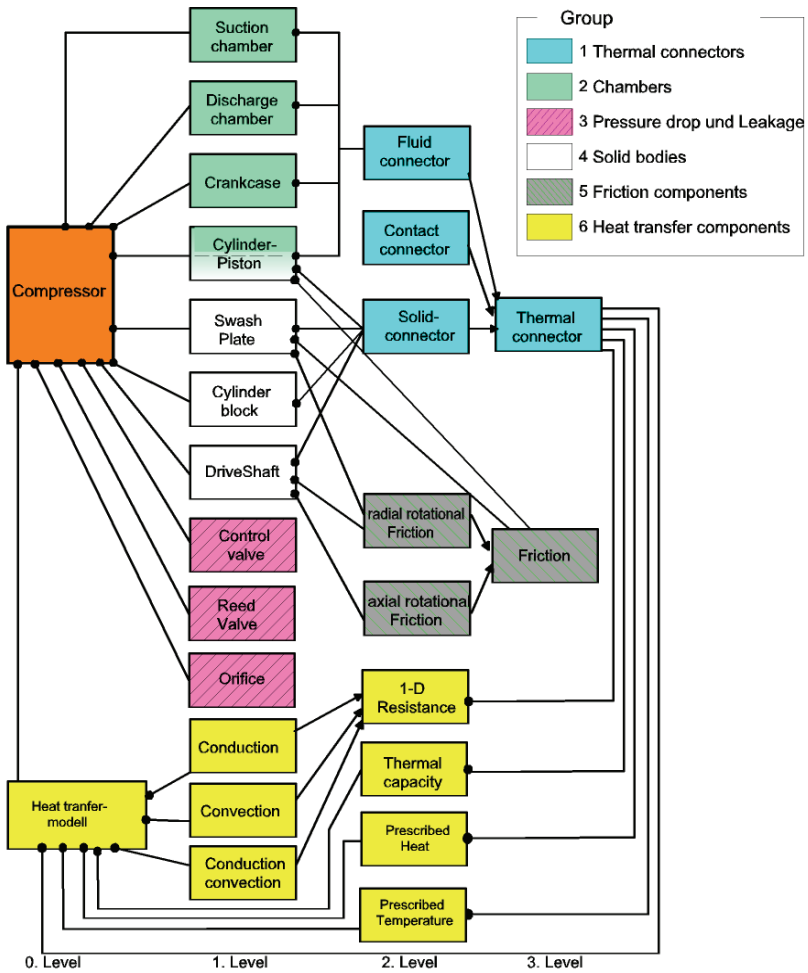

Figure 3 : Class diagram of the compressor model architecture.

Using a set of boundary conditions for compressor speed n, suction and discharge pressure and swash-plate angle result values for the selected variables were calculated. The calculation was carried out by changing the parameter value plus minus 10% of the nominal value. For the evaluation of the parameter sensitivity the relative sensitivity is defined as follows:

$$\Delta Y = \frac{Y_{Nominal} - Y(Parameter \pm 10\%)}{Y_{Nominal}} \tag{9}$$

Figure 4 shows the relative Sensitivity of the volumetric efficiency by variation of the suction valve coefficient K_{SV} plotted versus speed for different discharge pressures and swash-plate angels. The solid curves are representing the parameters variation with +10% and the dashed curves with -10 %. The maximum value of the sensitivity is about 0.4% of the nominal value – that means that the suction valve coefficient K_{SV} is no parameter of high significance. The sensitivity increases with increasing speed and swash-plate angle that is corresponding with increasing refrigerant mass flow rate. Related to the zero line the curves show an asymmetric trend that is caused by the non linear characterization of the pressure drop function as discussed in Equation 5.

The maximum relative sensitivity value of the volumetric efficiency is plotted for each of the varied parameters in Figure 5. Four parameters with high significance (Y > 20%) can be identified: the cylinder diameter D_C, the pitch circle radius R_{PC}, the death volume V_{dead} and the leakage mass flow rate coefficient $K_{leakage}$. There are three more parameters with a maximum relative sensitivity higher than 2%. All the rest of the parameters are of less significance. The resulting order of more or less significant parameters can be used as an important result that helps e.g. a compressor designer to carry out the redesign of a new optimized compressor generation.

The relative sensitivity of the result variables are presented assorted by their significance in Table 1 that gives an over-all review over the complete sensitivity analysis carried out in this study. Relevant parameter/variable combinations can be identified and evaluated. This helps to achieve a better understanding of the over-all compressor model behavior from the model developer, the simulation specialist and the design engineer point of view.

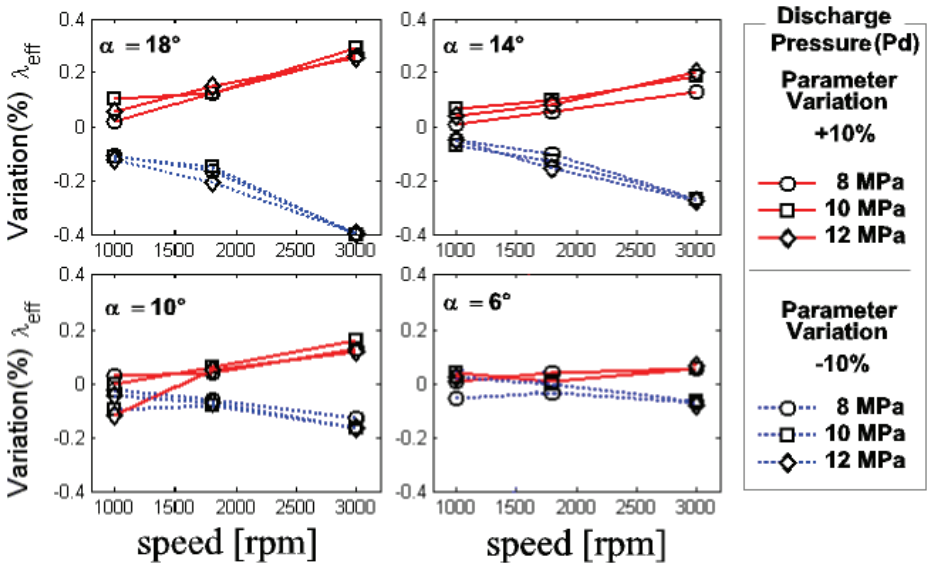

Figure 4 : Relative Sensitivity of the volumetric efficiency by variation of the suction valve coefficient K_{SV} plotted versus speed for different discharge pressures and swash-plate angels.

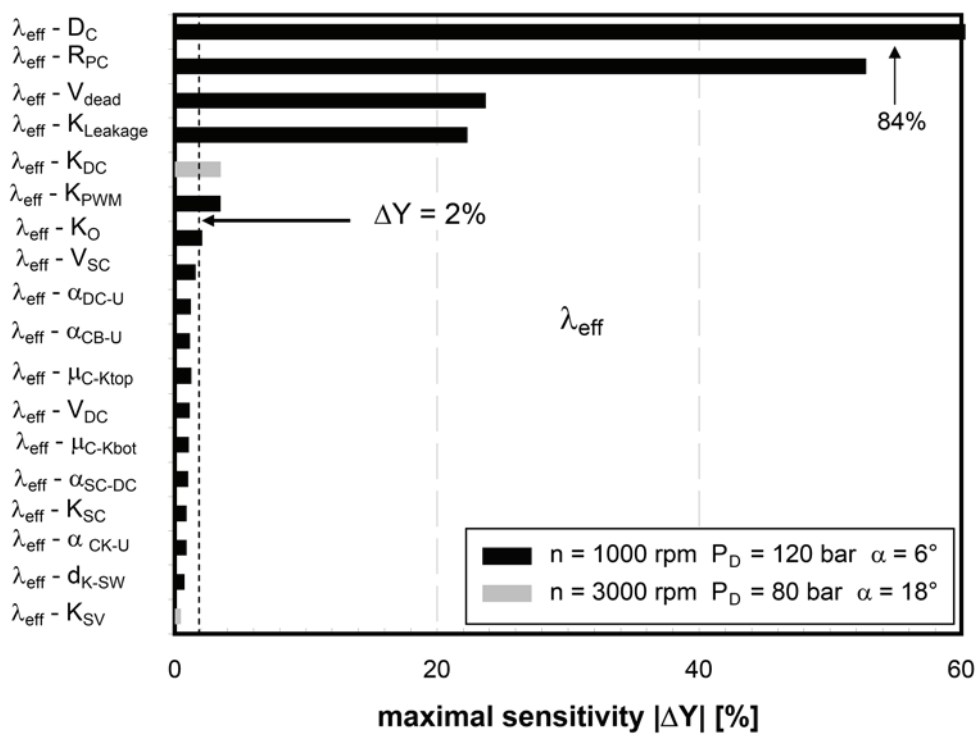

Figure 5 : Maximum relative sensitivity value of the volumetric efficiency plotted for each of the varied parameters.

Variable Y	$rel.\Delta Y > 2\%$	$0.4\% < rel.\Delta Y < 2\%$
$\lambda_{eff}*$	D_C, R_{PC}, V_{dead}, K_{leak}, K_{DC}, K_{PWM}, K_O	V_{SC}, α_{DC-U}, α_{CB-U}, $\mu_{C-K_{top}}$, V_{DC}, $\mu_{C-K_{bot}}$, α_{SC-DC}, K_{SC}, α_{CK-U}, d_{K-SW}, $K_{SV}*$
η_{eff}	D_C, R_{PC}, K_{leak}, V_{dead}, μ_{K-SW}, K_{PWM}, K_{DC}, K_O	V_{SC}, K_{SV}, α_{DC-U}, $\mu_{C-K_{top}}$, V_{DC}, α_{CB-U}, α_{SC-DC}, α_{CK-U}, $\mu_{B_{axial}}$, μ_{C-K}, K_{SC}, K_{DV}, d_{K-SW}
η_{mech}	D_C, μ_{K-SW}, R_{PC}	K_{PWM}, K_{leak}, V_{dead}, K_O, $\mu_{B_{axial}}$, K_{DC}
η_{isen}	D_C, R_{PC}, V_{DC}, K_{leak}, V_{dead}, K_{DC}	K_{SV}, K_{PWM}, K_O, K_{DV}
$\dot{m}_{eff}$	D_C, R_{PC}, V_{dead}, K_{leak}, K_{DC}, K_{PWM}, K_O	V_{SC}, $\mu_{C-K_{top}}$, α_{DC-U}, α_{CB-U}, V_{DC} $\mu_{C-K_{bot}}$, α_{SC-DC}, K_{SC}, α_{CK-U}, d_{K-SW} , K_{SV}
P_{eff}	D_C, R_{PC}, V_{dead}, μ_{K-SW}	K_{leak}, K_{SV}, K_{DC}, $\mu_{B_{axial}}$, K_{PWM}, K_{DV}, K_O
T_{DC}		D_C, R_{PC}
for all other combinations: $\Delta Y_{max} < \Delta Y min_0 = 0.4\%$		

Table 1: The relative sensitivity of the result variables are presented assorted by their significance.

5. CONCLUSIONS

This paper presents an advanced transient model for a R744 swash-plate compressor for mobile air conditioning applications. The over-all model consists of several partial models, that describe the thermodynamic laws in the control volumes of the cylinders, the suction and discharge chamber as well as the crankcase, the heat transfer, the dynamics and friction of the swash plate and the pistons, the valve behavior, the piston leakage and the control valve mass flows. Based on measured data from the literature a validation is carried out under stationary full load operation conditions. The main focus of this investigation and the achieved progress compared to the state-of-the-art are the simulative linkage of the sub models in one complete model: the dynamic modeling of pistons and swash plate taking into account the impact of each individual piston on each other. An extensive sensitivity analysis was carried out to achieve a better understanding of the over-all compressor model behavior. Within the sensitivity analysis 23 parameters corresponding to the 4 physical partial models were investigated using typical boundary conditions. With respect to the volumetric efficiency only 4 parameters of high significance can be identified: the cylinder diameter D_C, the pitch circle radius R_{PC}, the death volume V_{dead} and the leakage mass flow rate coefficient $K_{leakage}$.

NOMENCLATURE

η	efficiency	(-)
α	heat transfer coefficient	($W \cdot m^{-2} \cdot K^{-1}$)
K	flow coefficient	(-)
μ	Coulomb friction coefficient	(-)
R	radius	(m)
D	diameter	(m)
A	area	(m^2)
V	volume	(m^3)
z	position	(m)
θ, φ, ω	angle	(-)
ρ	density	($kg \cdot m^{-3}$)
T	temperature	(K)
h	specific enthalpy	(J)
p	pressure	(Pa)
P	power	(J)
$\dot{Q}$	heat rate	(W)

Subscripts

vol	volumetric
eff	effective
mech	mechanical
isen	isentropic
U	ambient(not system)
O	orifice
PWM	PWM valve (control)
S	suction
D	discharge
SV	suction valve
DV	discharge valve
SC	suction chamber
DC	discharge chamber
CK	crankcase
SW	swash plate
B	bearing
DS	drive shaft

$\dot{W}$	work rate	(W)	K	piston
c	specific heat capacity	(W)	CB	cylinder block
β	thermal compressibility	(Pa^{-1})	PC	pitch circle
κ	cubic expansion coefficient	(K^{-1})	CV	control volume
t	time	(s)	V	constant volume
m	mass flow rate	($kg \cdot s^{-1}$)	top	top
M	torque	($N \cdot m$)	bot	bottom
I	torque of inertia	($kg.m^{-2}$)	x,y,z	directions

REFERENCES

Böswirth, L.: Strömung und Ventiplattenbewegung in Kolbenverdichterventilen,Eigenverlag, Mödling, Österreich, 2002.

Böswirth, L.; Milovanova, Vanda: Simple but efficient Methods for estimation of Valve Loss Capacity Loss, Proceedings of Purdue Compressor Conference, Purdue West Lafayette, USA, 1998, p. 93-98.

Dynasim AB.: Dymola - Dynamic Modeling Laboratory with Modelica (Dynasim AB), Version: 2005, http://www.dynasim.se. -Online - Ressource, Abruf: 1. Apr. 2005.

Elmqvist, Hilding; Mattsson, Sven E.; Otter, Martin: Modelica: The New Object-Oriented Modeling Language, The 12th European Simulation Multiconference, ESM'98, June 16--19, Manchester, UK, 1998.

Fagotti, F.; Ferreira, R.; Prata, A.: A new Correlation for Instantaneous Heat Transfer between Gas and Cylinder in Reciprocating Compressors, Proceedings of Purdue Compressor Conference, Purdue West Lafayette, USA, 1998, p. 871-876.

Försterling, S.: Vergleichende Untersuchung von CO_2 Verdichtern in Hinblick auf den Einsatz in mobilen Anwendungen, Technische Universität Braunschweig, Dissertation, Braunschweig, 2004.

Hafner, J.; Gašperšič, B.: Dynamic Modeling if Reciprocating Compressor, Proceedings of Purdue Compressor Conference, Purdue West Lafayette, USA, 1990, p. 216-221.

Jørgensen: Variable Automotive CO_2 Compressor, Proceedings of Purdue Compressor Conference, Purdue West Lafayette, USA, 1998, p. 159-164

Köhler, J.: Skriptum zur Vorlesung Thermodynamik I, Technische Universität Braunschweig, 2002.

Lemke, N.: Untersuchung zweistufiger Flüssigkeitskühler mit dem Kältemittel CO_2, Dissertation TU Braunschweig, 2005.

Liu, R.; Zicheng, Z.: Heat Transfer between Gas and Cylinder Wall of Refrigerating Reciprocating Compressor, Proceedings of Purdue Compressor Conference, Purdue West Lafayette, USA, 1984, p. 110-115.

Lou, Z.: A Dynamic Model of Automotive Air Conditioning Systems, SAE Inernational, Warrendale, USA, Nr. 1884, 2005.

Magzalci, Dikran-Can: Konstruktive und energetische Betrachtung von CO_2-PKW-Klimaverdichtern. Dissertation TU Braunschweig, 2005

Pfafferott, T.; Schmitz, G.: Numeric Simulation of an Integrated CO2 Cooling System, Modelica Workshop Proceedings, 2000, p. 89-92.

Prakash, R.; Singh, R.: Mathematical Modeling and Simulation of Refrigerating Compressors, Proceedings of Purdue Compressor Conference, Purdue West Lafayette, USA, 1974, p. 274-285.

Süß, J.: Untersuchungen moderner Verdichter für Kohlendioxid als Kältemittel, Universität Hannover, Dissertation, 1998.

Tegethoff, W.; Köhler, J: Prozessmodellierung und Simulation, DKV Statusbericht Nr. 20, Kohlendioxid - Besonderheiten und Einsatzchancen als Kältemittel, 2006.

Tian, C.; Dou, C.; Xinjiang, Y.: A Mathematical Model of Variable Displacement Wobble Plate Compressor for Automotive Air Conditioning System, Applied Thermal Engineering, Elsevier, n.C3-3, USA, 2004.

Tojo, K.; Takao, K. und Nakamura, Y: A Study on the Kinematics of a Variable Displacement Compressor for Automotive Air Conditioners, Proceedings of Purdue Compressor Conference, Purdue West Lafayette, USA, 1988, p. 496-504.

Touber, S.: A Contribution to the Improvement of Compressor Valve Design, Delft University of Technology the Netherlands, Dissertation, 1976.

Tummescheit, H.; Eborn, Jonas; Prölß , K.; Försterling, S.; Tegethoff, W.: AirConditioning – eine Modelica-Bibliothek zur dynamischen Simulation von Kältekreisläufen, Deutschland, 2005.