Purdue University
Purdue e-Pubs

International Compressor Engineering Conference | School of Mechanical Engineering

2006

Angular Contact Ball Bearings with Peek Cages in Refrigeration Screw Compressors

Lars Sjoholm
IR Climate Control

William Bonis
SKF USA

Follow this and additional works at: http://docs.lib.purdue.edu/icec

Sjoholm, Lars and Bonis, William, "Angular Contact Ball Bearings with Peek Cages in Refrigeration Screw Compressors" (2006). *International Compressor Engineering Conference.* Paper 1814.
http://docs.lib.purdue.edu/icec/1814

This document has been made available through Purdue e-Pubs, a service of the Purdue University Libraries. Please contact epubs@purdue.edu for additional information.
Complete proceedings may be acquired in print and on CD-ROM directly from the Ray W. Herrick Laboratories at https://engineering.purdue.edu/Herrick/Events/orderlit.html

ANGULAR CONTACT BALL BEARINGS WITH PEEK CAGES IN REFRIGERATION SCREW COMPRESSORS

Lars Sjoholm[1], William Bonis[2]

[1]IR Climate Control (Thermo King), Advanced Engineering,
Minneapolis, MN, USA
Lars_Sjoholm@IRCO.com

[2]SKF USA Inc.,
Kulpsville, PA, USA
William.L.Bonis@SKF.com

ABSTRACT

This paper deals with angular contact ball bearings in refrigeration screw compressors. Extended operation range has been accomplished by changing the cage material and the cage design. The extended operation range corresponds to decreased viscosity of the base lubricant, increased operating temperature and increased operating speed of the bearing.

1. INTRODUCTION

The thrust (axial) bearing in a refrigeration screw compressor is commonly the bearing that needs the most attention. The most common bearing for handling thrust load is the angular contact ball bearing (figure 1), though the four-point contact ball bearing is also used. When studying failed compressors involving premature bearing failures, the failures are almost never a result of fatigue. Rather, it is usually ineffective lubrication due to lack of lubrication or insufficient oil film that causes the failure. The reason for this is often the questionable viscosity of the lubricant due to the solubility of the refrigerant in the lubricant. Due to this lubrication situation, the cage plays a large role in the failure or in the performance of the bearing and the entire screw compressor. There are three basic cage configurations, molded, pressed (stamped) and machined (figure 2).

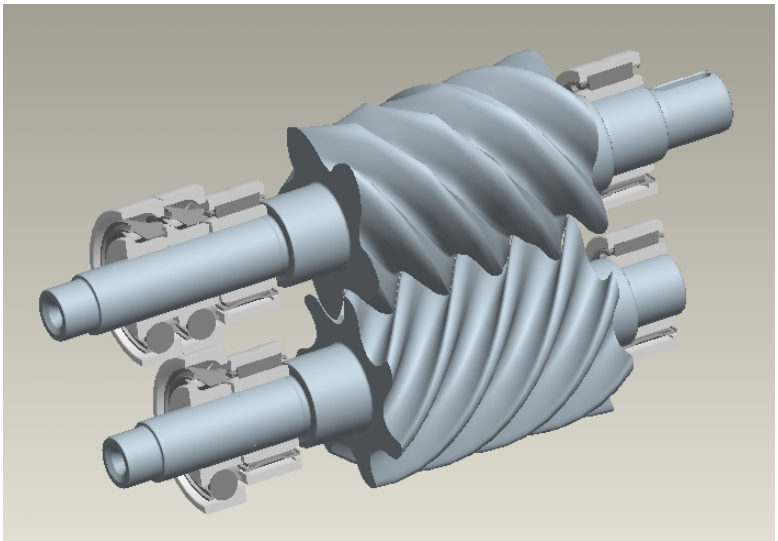

Figure 1: Screw compressor rotors with angular contact ball bearings (thrust load) and needle bearings (radial load)

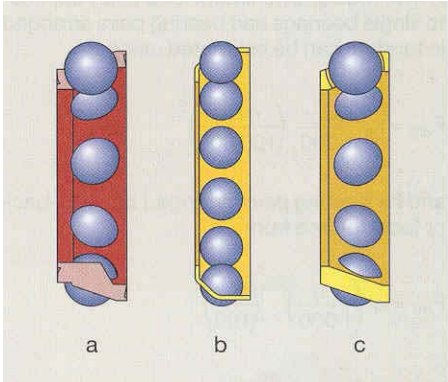

Figure 2: a) Molded, b) pressed (stamped) and c) machined cage

2. FIRST OPERATING LIMITS/CAGE TYPE

The initial selection for bearing cage configuration was pressed window-type sheet brass cage. The discharge temperature as well as bearing temperature was limited to 121.1 °C (250 °F) with occasional temperature spikes up to 135 °C (275 °F). The temperature spikes made it impossible to use glass fiber reinforced polyamide cage material (figure 3). The lubricant was polyolester type ISO VG120. The refrigerants are R404A, R134a and R407C. The applications of this screw compressor are mobile refrigeration (transport refrigeration, trailer) and bus air-conditioning. The maximum speed of the bearing (or the rotor) was 12,000 rpm. The bearing with pressed sheet brass (figure 4) worked well with those application limits.

Figure 3: Polyamide cage

Figure 4: Pressed (stamped) brass cage

3. NEW OPERATING LIMITS

There was a need to widen the operating limits. The viscosity of the polyolester lubricant was reduced from ISO VG 120 to ISO VG 30. The maximum discharge temperature (bearing temperature) was increased to 148.9 °C (300 °F). The maximum speed of the bearing (or the rotor) was increased to 14,000 rpm.

4. THE ALTERNATIVE CAGE DEVELOPMENT

The main cage alternatives were pressed sheet steel cage, machined steel cage or machined brass cage. The machined steel cage looked relatively good from cost perspective, but the increased speed (increased centrifugal force on the bearing balls) calls for a smoother contact situation between the bearing balls and the cage as well as a larger surface area of each cage pocket facing each ball. This new operating speed and influence of centrifugal force makes it impossible to use a pressed sheet cage of any material. There was a need for a moldable polymeric material with higher temperature limits than polyamide. A cage made of glass fiber reinforced polyether ether ketone (PEEK) was, at first, considered too expensive. The first approach was to keep the original speed limits and test the pressed window-type sheet brass cage at the increased temperature and the decreased viscosity. Several 1000-1500 hour tests with 148.9 °C (300 °F) temperature and polyol ester ISO VG 30 lubricant showed heavy cage wear (figure 5), which promoted rotation of the inner ring of the bearing relative to the rotor shaft. Heat was generated giving risk for compressor failure. A PEEK cage was considered again. The first prototype bearings, were made with machined PEEK cages, see figure 6. The preliminary test results were promising, giving a positive response to develop a molded PEEK cage.

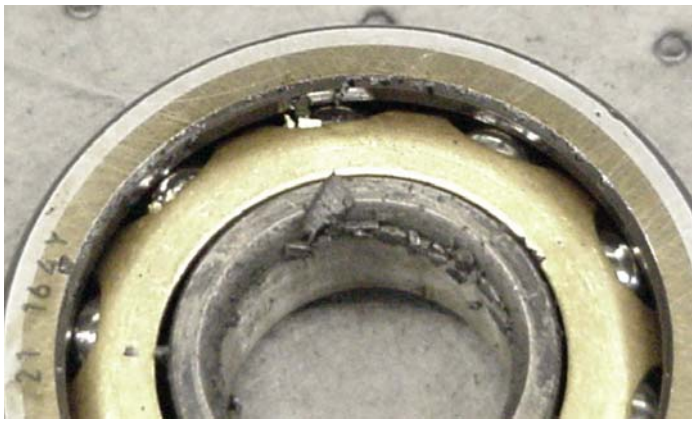

Figure 5: Bearing with worn brass cage.

Figure 6: Bearing with machined PEEK cage

5. THE FINAL BEARING/CAGE SOLUTION

To minimize the cost of the PEEK cage, the cage had to be molded (figure 7). However, the molded PEEK cage needed more room than the original pressed sheet brass cage. Due to this situation, the number of balls had to be reduced from ten to nine. This would typically mean a reduction of the bearings basic load rating of 10 %. To compensate for this, improved bearing steel was used, further optimization of the heat treatment of the bearing steel as well as improved surface finish on the balls and the raceways. This way, the final bearing had an actual slightly increased basic load rating. Several 1000 hour tests were performed with different combinations of the refrigerants and the extended operating conditions. All results were positive. The final test was to mix some air in the refrigeration system and disconnect the maximum discharge temperature cut out function. The discharge temperature varied between 176.7 °C (350 °F) and 204.4°C (400 °F). The test ran for more than 1000 hours. The lubricant was discolored, indicating break down with acid formation. The inner race showed bluish discoloration, however the cage looked good (figure 8). This test showed that the cage is no longer the weak link, now placing more emphasis on the lubricant film and/or fatigue properties of the inner race.

Figure 7: PEEK cage

Figure 8: Bearing exposed to extreme heat and air

6. CONCLUSIONS

The use of PEEK cages in angular contact ball bearings in refrigeration screw compressors, has increased operation limits for R404A, R134a and R407C with polyolester lubricants. The viscosity of the polyolester lubricant was reduced from ISO VG 120 to ISO VG 30. The maximum discharge temperature (bearing temperature) was increased to 148.9 °C (300 °F). The maximum speed of the bearing (or the rotor) was increased to 14,000 rpm (17 % speed increase). This was done with minimal cost increase of the bearing. The value of the increased operating range more than balanced the individual bearing cost increase.

ACKNOWLEDGEMENTS

The authors wish to thank the managements of SKF and IR Climate Control for permission to publish this paper. The authors also acknowledge the assistance to this work by Mr. Hans Wallin, Mr. Kevin Carpentier of SKF, Mrs. Sandy Thielen and Mr. Dean Osterman of IR Climate Control.