Purdue University
Purdue e-Pubs

International Compressor Engineering Conference | School of Mechanical Engineering

2006

Optimal Performance Design Method of Thrust Slide-Bearing in Scroll Compressors for Maximum Efficiency

Tatsuya Oku
Osaka Electro-Communication University

Keiko Anami
Ashikaga Institute of Technology

Noriaki Ishii
Osaka Electro-Communication University

Kiyoshi Sawai
Matsushita Electric Industrial Co.

Charles W. Knisely
Bucknell University

See next page for additional authors

Follow this and additional works at: http://docs.lib.purdue.edu/icec

Oku, Tatsuya; Anami, Keiko; Ishii, Noriaki; Sawai, Kiyoshi; Knisely, Charles W.; Morimoto, Takashi; and Hiwata, Akira, "Optimal Performance Design Method of Thrust Slide-Bearing in Scroll Compressors for Maximum Efficiency" (2006). *International Compressor Engineering Conference.* Paper 1803.
http://docs.lib.purdue.edu/icec/1803

This document has been made available through Purdue e-Pubs, a service of the Purdue University Libraries. Please contact epubs@purdue.edu for additional information.
Complete proceedings may be acquired in print and on CD-ROM directly from the Ray W. Herrick Laboratories at https://engineering.purdue.edu/Herrick/Events/orderlit.html

Authors
Tatsuya Oku, Keiko Anami, Noriaki Ishii, Kiyoshi Sawai, Charles W. Knisely, Takashi Morimoto, and Akira Hiwata

This article is available at Purdue e-Pubs: http://docs.lib.purdue.edu/icec/1803

Optimal Performance Design Method of Thrust Slide-Bearing in Scroll Compressors for Its Best Efficiency

*Tatsuya Oku[1], Keiko Anami[2], Noriaki Ishii[3], Charles W. Knisely [4],
Kiyoshi Sawai [5], Takashi Morimoto [6], Akira Hiwata [7]

[1] Ph.D Course Student, [3] Professor, Division of Mechanical and Control Engineering,
Graduate School, Osaka Electro-Communication University,
18-8 Hatsu-chou, Neyagawa-city, Osaka 572-8530, Japan
Tel: +81-720-20-4561; E-mail: d04201@isc.osakac.ac.jp
[2]Assistant Professor, Department of Mechanical Engineering, Ashikaga Institute of Technology, Japan
[4]Associate Professor, Mechanical Engineering Department, Bucknell University, USA
[5] Manager, [6] Chief Engineer, [7] Engineer, Air-Conditioning Devices Division,
Matsushita Home Appliance Company, Matsushita Electric Industrial Co., Ltd.
5-1-5 Sakuragaoka-chou, Kusatsu-city, Shiga 525-8502, Japan,

ABSTRACT

This study presents an optimal design methodology for lubrication of the thrust slide-bearing in scroll compressors, where the average Reynolds equation by Patir & Cheng and the solid contact theory by Greenwood & Williamson were applied to calculate the resultant lubrication performance. For given values of friction area, thrust load and orbiting speed, the oil film pressure, the solid contact force and the friction forces were calculated to determine the friction coefficient. The friction coefficient decreases gradually with decreasing friction area, because of decreasing oil viscous force. However, when the friction area becomes quite small, the influence of the surface roughness becomes large, thus resulting in an increase in the friction coefficient. Thus, a friction area must exist at which the friction coefficient is at its minimum, that is, a point of optimum performance. In addition, the optimal friction area changes with working conditions, such as the lubricating oil viscosity, the orbiting speed and the thrust load. It is concluded that an optimal design value for specified working conditions can be determined for the thrust slide-bearing of scroll compressor.

1. INTRODUCTION

The common type of thrust bearing of the scroll compressors, widely used for room air-conditioners, is the sliding type for its high performance in lubrication and for its low noise generation, where the orbiting thrust flat plate is firmly pressed on the fixed one. The thrust slide-bearing supports a large thrust force and is not lubricated by a special device like an oil pump with high power, but the thrust slide-bearing never induces any serious troubles in lubrication, such as a seizure of the sliding surfaces, and rather exhibits a better performance in lubrication. In order to reveal the essential characteristics of lubrication at the thrust slide-bearing, authors have been doing researches. As the first step, lubrication tests for the thrust slide-bearing were conducted by Ishii et al (2004a). As a result, it was shown that the excellent lubrication was induced by a wedge formation between the friction surfaces, caused by elastic deformation of the thrust plate. Further, for given values of the wedge angle, friction force was calculated to determine the friction coefficient at the thrust slide-bearing. As a result, it was shown that the theoretical calculations show good agreement with the lubrication test results (see Oku et al. 2004b).

An interesting experimental study for lubrication at the thrust slide bearing for its better performance has been presented by Nishiwaki et al. (1996), where it was shown that the lubrication performance at the thrust slide bearing becomes better at a comparatively small friction area. This study significantly suggests a possible optimal design of the thrust slide bearing for its best performance at a certain friction area. From such a basic idea, in this study, our theoretical analysis method developed for the thrust slide-bearing of scroll compressors was applied to calculate the

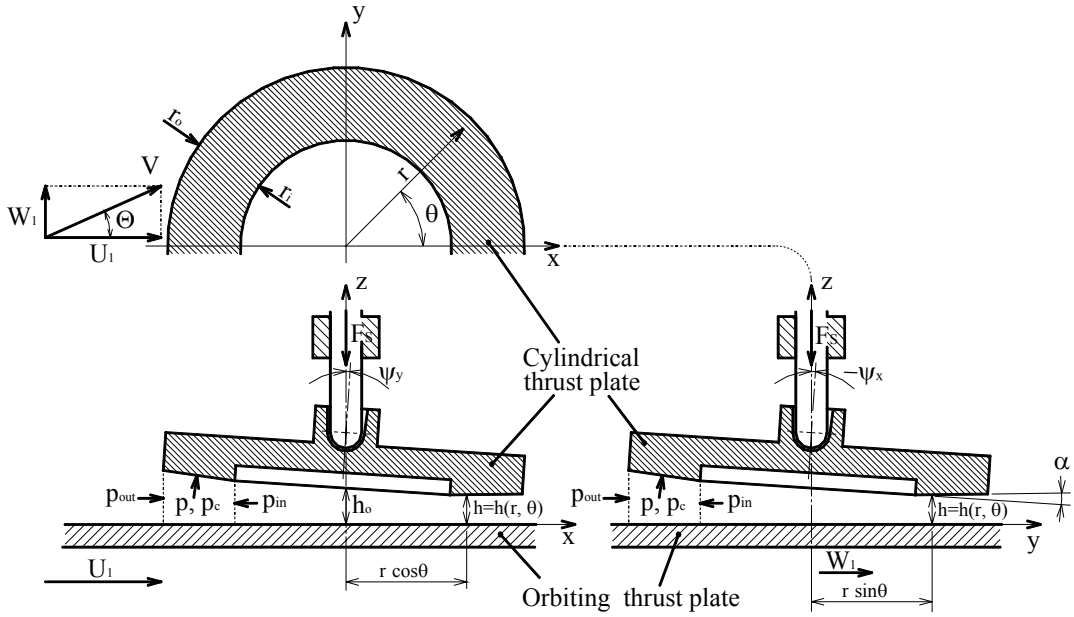

Figure 1: Mathematical model of thrust slide-bearing for theoretical analysis of fluid lubrication.

friction coefficient for a variety of friction surface area, thrust load and orbiting speed, to confirm the optimal performance design methodology yielding the best compressor efficiency.

2. THEORETICAL ANALYSIS MODEL FOR THRUST SLIDE-BEARING

From a viewpoint of doing fundamental research, the thrust slide-bearing is represented with a simplified ring model shown in Figure 1. In actual scroll compressors, the orbiting scroll thrust plate made from aluminum alloy deforms elastically due to the back pressure, thus forming a wedge between the friction surfaces at the thrust slide-bearing. In the present theoretical model, its wedge formation is represented with a rigid body cylindrical thrust plate model which has a wedge angle α at its periphery. The outer radius is represented by r_o and the inner radius by r_i. The cylindrical thrust plate is pressed downward through a pivot bearing, as represented by the thrust load F_s, while the flat thrust plate performs the orbiting motion on the horizontal plane. The cylindrical thrust plate can make the axial and precession movements by oil-film pressure. The mean lift of the cylindrical thrust plate is represented by h_0, and its rotations are represented by ψ_x about x-axis and ψ_y about y-axis.

The oil film thickness h between the cylindrical and flat thrust plates is given by a function of the polar coordinates with radius r and angle θ:

$$h(r,\theta) = h_0 + (r - r_i)\tan\alpha - r\cos\theta \cdot \psi_y + r\sin\theta \cdot \psi_x \quad \text{where} \quad r_i \le r \le r_o . \tag{1}$$

2.1 Oil Film Thrust and Viscous Forces

The oil-film pressure p(r,θ) generated in the thrust bearing surface can be numerically calculated from the average Reynolds equations by Patir and Cheng (1978, 1979) developed for the rough surface slide-bearing with isothermal and incompressible fluid.

Integrating p(r,θ) over the whole bearing surface, the resultant oil film force F_{OIL} can be calculated:

$$F_{OIL} = \iint p(r,\theta)\, r d\theta dr . \tag{2}$$

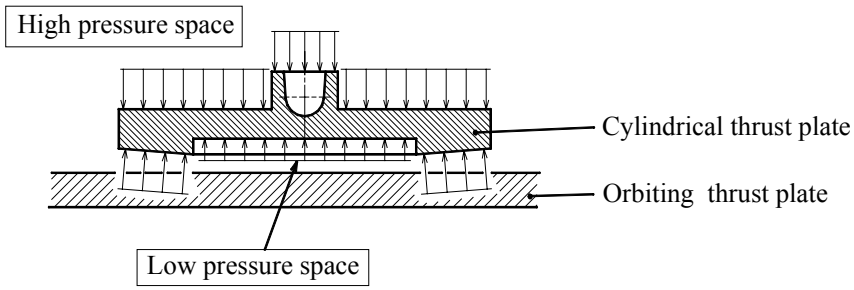

Figure 2. Gas thrust forces on fixed cylindrical thrust plate.

In addition, as given by Patier & Cheng, the oil film viscous force F_{vs} on the bearing surface with random roughness, due to oil viscosity, can be calculated by

$$F_{vs} = \iint \frac{\mu^* V}{h}\left[\left(\phi_f + \phi_{fs}\right) - 2V_{r2}\phi_{fs}\right] r d\theta dr \,, \tag{3}$$

where ϕ_f and ϕ_{fs} are called a "shear stress factor", correcting the effect of the surface roughness on the oil film shearing force.

2.2 Solid Contact Force and Its Shearing Force

Using the solid contact theory by Greenwood and Williamson (1966), the local real contact area between sliding surfaces can be calculated from clearance height distribution. Further, from local real contact area dA, plastic flow pressure p_c and shearing strength τ of the friction surface with the softer material, the solid contact force F_{sc} and the solid shearing force F_{ss} can be calculated:

$$F_{sc}\left(\equiv \int p_c \cdot dA\right) = \iint p_c \alpha^*(r,\theta) \cdot r d\theta dr \,, \quad F_{ss}\left(\equiv \int \tau \cdot dA\right) = \iint \tau \alpha^*(r,\theta) \cdot r d\theta dr \,, \tag{4}$$

where, $\alpha^*(r,\theta)$ represents the local solid contact ratio, and can be calculated as a ratio of the local real contact area dA and the local nominal contact area $rd\theta dr$.

2.3 Friction Coefficient

The resultant frictional force F_f is given by the sum of oil film shearing force F_{vs} and solid shearing force F_{ss}, while the resultant thrust force F_T is given by the sum of axial spring force F_s and nominal gas thrust force F_p. The frictional coefficient μ can be calculated by

$$\mu \ \left(\equiv \frac{F_f}{F_T}\right) = \frac{F_{vs} + F_{ss}}{F_s + F_p} \,. \tag{5}$$

As shown in Figure 2, the outside of the cylindrical thrust plate is in the high pressure space, while the inside is in the low pressure space. The pressure on the friction surface with a wedge is basically the same as the outside pressure. Therewith, nominal gas thrust force F_p can be calculated.

2.4 Attitude of the Cylindrical Thrust Plate

Forces acting on the cylindrical thrust plate are shown in Figure 3, where the spring force through pivot bearing is represented by F_s, the gas thrust force by F_{po} on the outside and by F_{pi} for the inside, the oil film thrust force on a small friction area by $(p+p_c)rd\theta dr$ and the resultant frictional force by F_f. Taking account of the equilibrium equations of forces and moments, the attitude of cylindrical thrust plate, represented by the average clearance height h_o, the rotations ψ_x and ψ_y, can be determined (see Oku et al. 2004 for detail).

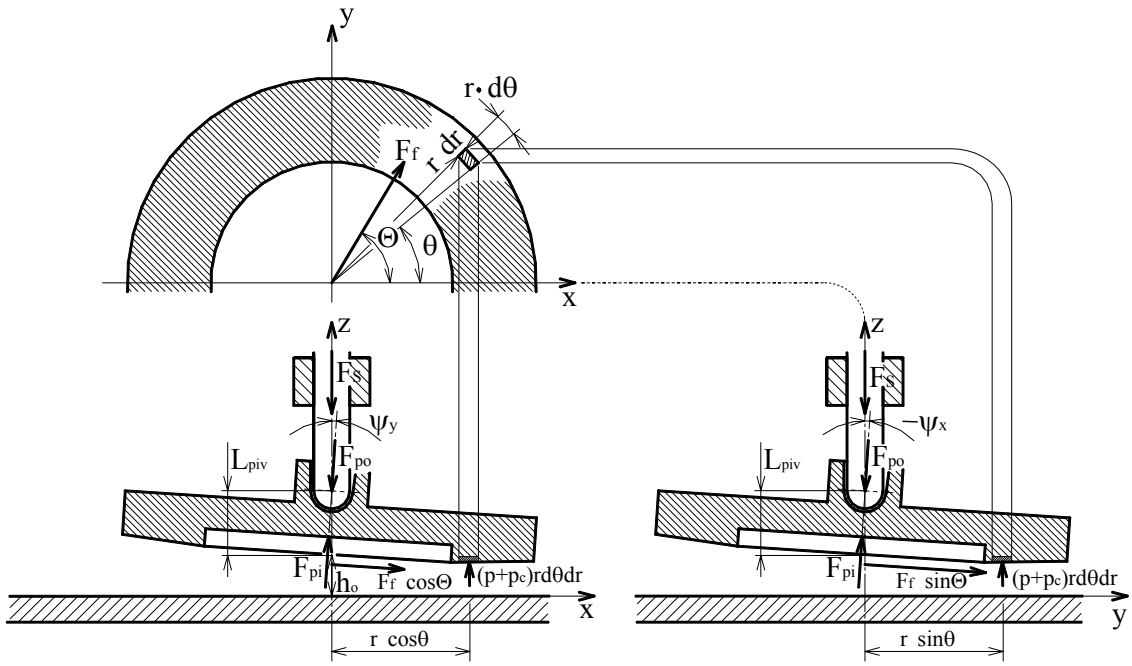

Figure 3: Forces on the cylindrical thrust plate.

3. MAJOR CHARACTERISTICS OF LUBRICATION

3.1 Numerical Calculations

Numerical calculations were made for the major specifications shown in Table 1. The pressure difference at the thrust slide-bearing, Δp, was varied from 0 to 0.6MPa. The orbiting speed N was varied from 300 to 6000rpm, with the orbiting radius of 3.0mm. The wedge angle at the thrust slide-bearing was varied from $\tan\alpha=1.0\times10^{-4}$ to 5.5×10^{-4}, based on the pressure difference Δp. The inner radius r_i of the bearing surface was fixed at 30mm and the outer radius r_o was varied from 35mm to 53mm, thus resulting in the radius ratio r_o/r_i from 1.17 to 1.77, as shown by illustrations in Table 1. The number of lattice division for numerical calculations was fixed at 180 in the radial direction and at 24 in the tangential direction, as its permissible maximum value for our computer (Xeon3

Table 1 : Major specifications for calculations

Standard deviation of surface roughness	Orbiting thrust plate σ_1 [μm]	1.5
	Cylindrical thrust plate σ_2 [μm]	0.18
Bearing dimension	Radius ratio r_o/r_i	1.17~1.77
Plastic flow pressure p_c [MPa]		1600
Surface density of asperities η [mm^{-2}]		150
Asperity summits radius β [μm]		2.0
Lubricant viscosity μ^* [Pa・s]		0.051
Boundary pressure	Inside p_{in} [MPa]	1.1~0.5
	Outside p_{out} [MPa]	1.1
Pressure difference Δp [MPa]		0~0.6
Resultant thrust force F_T [N]		600~2296
Wedge inclination tanα ($\times10^{-4}$)		1.0~5.5
Orbital speed N [rpm]		300～6000
Orbital radius [mm]		3.0
Number of lattice division	Radial	24
	Tangential	180

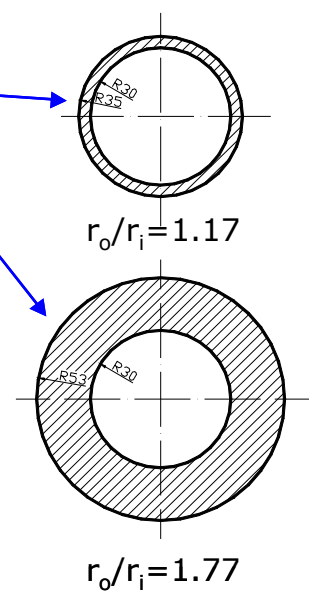

3.2GHz×2, Memory 2GB, Fortran90 with IMSL Library).

First, assuming an initial attitude of the cylindrical thrust plate for the clearance height given by expression (1), the solid contact and friction forces were calculated. Secondly the Average Reynolds Equation was solved numerically by using the SOR (Successive Over-Relaxation) method to determine the oil film forces for given boundary conditions. Calculated results were fed back to the equilibrium equations of forces and moments on the cylindrical thrust plate to determine more correct attitude of the cylindrical thrust plate. Calculations were repeated to obtain the solutions converged.

3.2 Calculated Results

Calculated results of the friction forces and the average clearance for a variety of pressure difference Δp are shown in Figure 4**,** where the orbiting speed was 3000rpm and the abscissa is the radius ratio r_o/r_i. When the radius ratio is sufficiently large, the sufficient oil film pressure can be built-up and the average clearance height becomes sufficiently larger. Therefore, the solid shearing force F_{ss} does not appear, and the oil film viscous force F_{vs} becomes dominant in resultant friction force F_f. Therefore, as the radius ratio decreases, the friction area decreases, thus decreasing the resultant friction force F_f, as shown by the solid line.

However, when the radius ratio becomes too smaller, the sufficient oil film pressure cannot be built-up and the average clearance height becomes smaller. Therefore, the solid shearing force F_{ss} appears around at the radius ratio

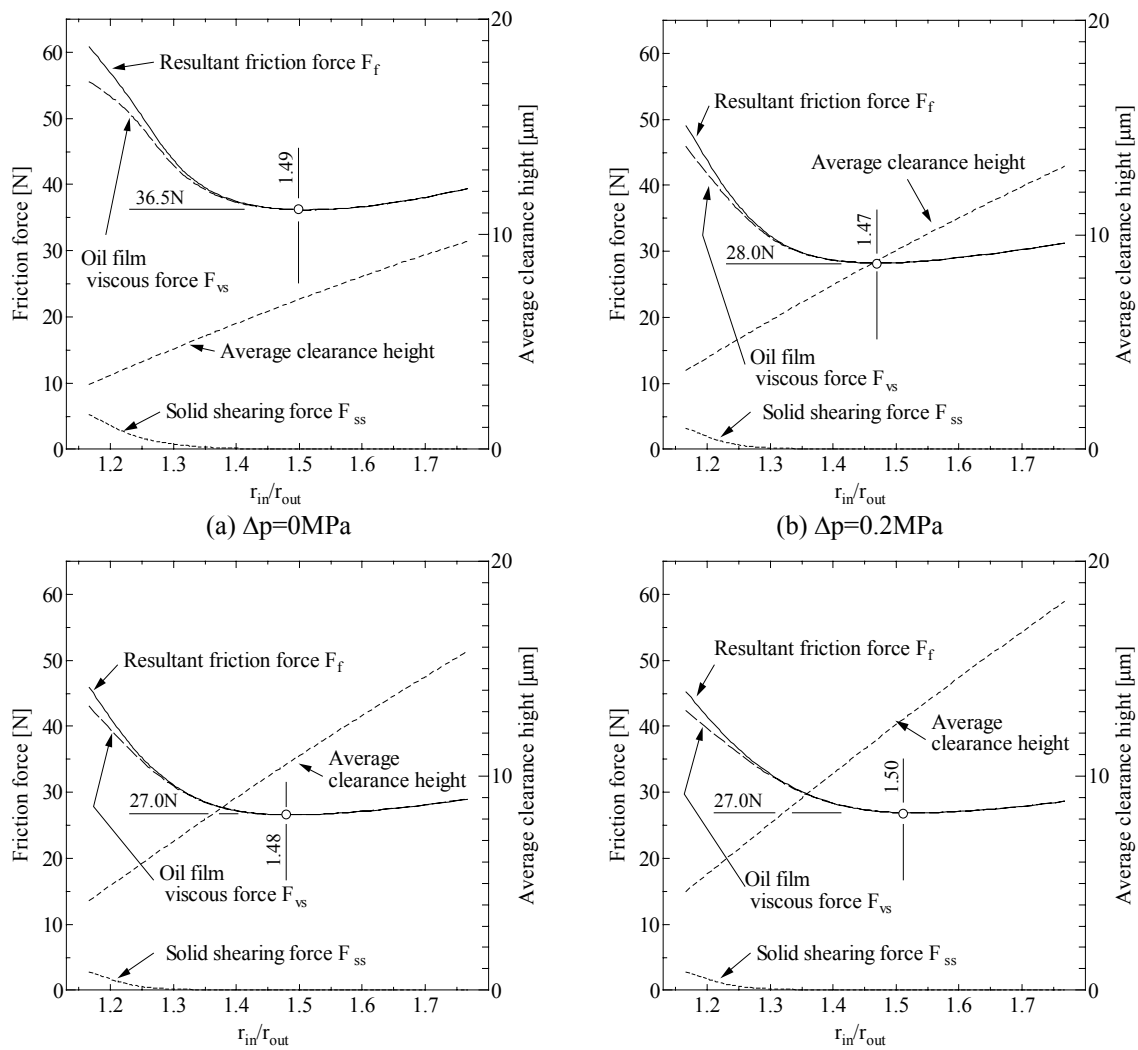

Fig.4 Calculated results. (N=3000rpm)

of 1.4, as shown by the dotted line. In addition, as shown by the dashed line, the oil film viscous force F_{vs} also becomes seriously larger, caused by the increased surface roughness effect. As a result, with decreasing the radius ratio, the resultant friction force F_f seriously increases.

As a result, there appears an optimal radius ratio yielding the smallest resultant friction force, as plotted in Figure 3, which is about 1.47 to 1.50, independently upon the pressure difference. The minimum value of resultant friction force significantly decreases with increasing the pressure difference Δp. This is because the wedge angle α at the friction surface increases with increasing Δp.

The calculated resultant friction forces were reduced to the friction coefficient μ, defined by expression (5), as shown in Figure 5, where the parameter is the orbiting speed N ranging from 600 to 6000rpm. As the orbiting speed increases, for all the cases of Δp, the friction coefficient μ increases because of an increase in the oil film viscous force F_{vs}, while the optimal radius ratio significantly decreases from about 1.7 to 1.4. This is naturally because of an increase in the oil film viscous force. It is a matter of course that the optimal values of friction coefficient μ decreases with increasing the pressure difference Δp, caused by an increase of the wedge angle between the friction surfaces.

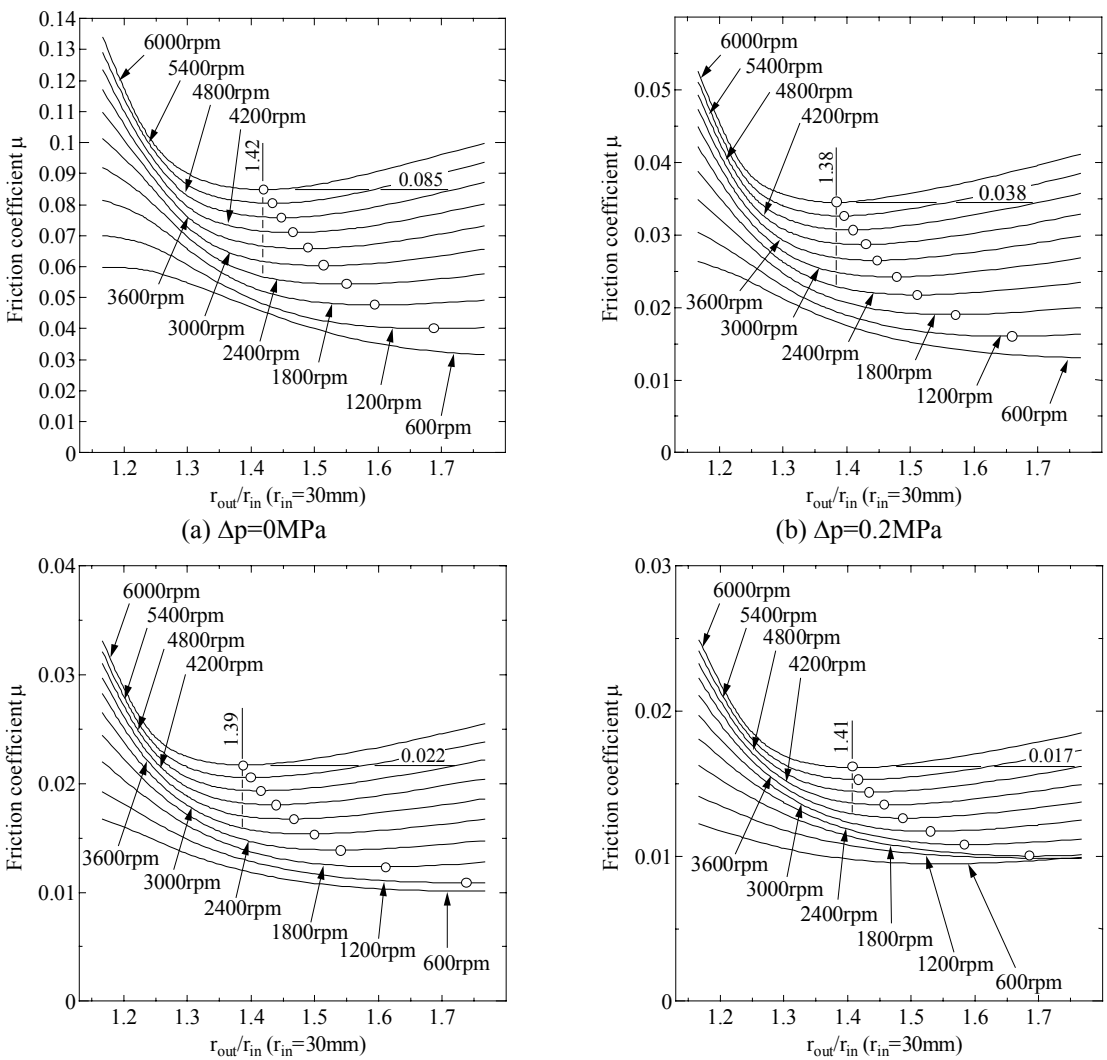

(a) Δp=0MPa (b) Δp=0.2MPa

(c) Δp=0.4MPa (d) Δp=0.6MPa

Fig.5 Calculated friction coefficient.

4. CONCLUSIONS

Theoretical calculations were made to determine the optimal design value of a scroll compressor for its maximum performance in lubrication at the thrust slide-bearing, where our theoretical analysis based on the average Reynolds equation and the solid contact theory were applied to calculate the resultant friction coefficient with a variety of outer-to-inner radius ratio of the friction surface.

The resultant friction coefficient is dependent upon the friction area, thrust load and orbiting speed. When the friction area is comparatively smaller, the oil film pressure cannot be sufficiently built-up, and hence the resultant friction coefficient becomes larger caused by the surface roughness effect upon the oil film viscous force in addition to the solid contact force. On the other hand, when the friction area is comparatively larger, the sufficient oil film pressure can be built-up and the average clearance height becomes sufficiently larger. However, the resultant friction coefficient becomes larger again, with increasing the friction area, caused by an increase in the oil film viscous force. As a result, there exists an optimal friction area achieving the minimum resultant friction coefficient, which can be represented by the outer-to-inner radius ratio of the thrust slide-bearing.

The optimal outer-to-inner radius ratio is significantly dependent upon the orbiting speed but not upon the thrust load. With increasing the speed, the optimal radius ratio decreases, for example, to 1.4 at 6000rpm. This is because the sufficient oil film can be built-up at smaller friction area when the orbiting speed is higher. The resultant friction coefficient μ is significantly dependent upon the thrust load. With increasing the outside-to-inside pressure difference Δp at the speed of 6000rpm, μ becomes significantly smaller, for example, μ=0.085 at Δp=0MPa to μ=0.017 at Δp=0.6MPa. This drastic improvement is caused by the increase in wedge angle between the friction surfaces, depending upon the thrust load.

It should be noted here that the orbiting speed is higher, the friction loss naturally becomes larger, and hence the bearing radius ratio should be designed at about 1.4 or less for the optimal performance of the thrust slide-bearing of the scroll compressors.

NOMENCLATURE

dA	local real contact area,	m^2
F_f	resultant frictional force,	N
F_{OIL}	oil film force,	N
F_p	nominal gas thrust force,	N
F_s	axial spring force,	N
F_{sc}	solid contact force,	N
F_{ss}	solid shearing force,	N
F_T	resultant thrust force,	N
F_{vs}	oil viscous force,	N
h	nominal oil film thickness,	μm
h_o	average clearance,	μm
N	orbiting speed,	rpm
p	oil film pressure,	Pa
p_c	plastic flow pressure,	Pa
p_{out} , p_{in}	boundary pressure,	Pa
r_o, r_i	plate radius,	m
U_1, W_1, V	boundary velocity,	m/s
V_{r2}	variance ratio	
α	wedge angle,	rad
α^*	local solid contact ratio	
β	asperity summits radius,	μm
Δp	pressure difference,	Pa
η	surface density of asperities,	m^{-2}
Θ	orbiting angle,	rad
μ	frictional coefficient	
μ^*	oil viscosity,	$Pa \cdot s$
σ_1, σ_2	standard deviations of surface roughness,	μm
τ	shearing strength,	Pa
ϕ_f,ϕ_{fs}	shear stress factor	
ψ_x , ψ_y,	rotation angle,	rad

REFERENCES

Ishii, N., Oku, T., Anami, K. & Fukuda, A., 2004a, Lubrication mechanism at thrust slide-bearing of scroll compressors (experimental study), *International Compressor Engineering Conference at Purdue*, C103.

Oku, T., Anami, K., Ishii, N. & Sano, K., 2004b, Lubrication mechanism at thrust slide-bearing of scroll compressors (theoretical study), *International Compressor Engineering Conference at Purdue*, C104.

Nishiwaki, F., Hasegawa, H., Ikoma, M., Matsuzaki, R. & Muramatsu, S., 1996, Mechanical Loss Reduction at Thrust Bearings of Scroll Compressors Using R407C, *International Compressor Engineering Conference at Purdue*, p.263-268.

Patir, N. & Cheng, H. S., 1978, An average flow model for determining effects of three dimensional roughness on partial hydrodynamic lubrication, *Transactions of the ASME* , Vol. 100, p12-17.

Patir, N. & Cheng, H. S., 1979, Application of average flow model to lubrication between rough sliding surfaces, *Transactions of the ASME* , Vol. 101, p220-230.

Greenwood, J.A. & Williamson, J.B.P., 1966, Contact of nominally flat surfaces, Burndy Corporation Research Division, Norwalk, Connecticut, USA, p.330-319.

ACKNOWLEDGEMENT

The authors would like to express their sincere gratitude to Mr. Masanobu Seki, Senior Councilor, Air Conditioning Devices Division, and Mr. Shuichi Yamamoto, Director, Air-Conditioning Research Laboratory, Corporate Engineering Division, Matsushita Home Appliances Company, the Matsushita Electric Industrial Co. Ltd., for their cooperation in carrying out this work and their permission to publish this study. The authors extend their thanks to Mr. Takahiko Sano, who helped theoretical calculations for the present study. Furthermore, the authors extend their great thanks to Prof. Hiroshi Yabe and Prof. Toshihiro Ozasa, Osaka Electro-Communication University for their significant advises of present theoretical calculations.