Purdue University
Purdue e-Pubs

International Compressor Engineering Conference | School of Mechanical Engineering

2006

Innovative Free-Piston Compressor Based on Generalized Conception of Compressors Driven by an Oscillating Electrical Motor

Sigitas Kudarauskas
Klaipeda University

Rimantas Didziokas
Klaipeda University

Loreta Simanyniene
Klaipeda University

Follow this and additional works at: http://docs.lib.purdue.edu/icec

Kudarauskas, Sigitas; Didziokas, Rimantas; and Simanyniene, Loreta, "Innovative Free-Piston Compressor Based on Generalized Conception of Compressors Driven by an Oscillating Electrical Motor" (2006). *International Compressor Engineering Conference.* Paper 1777.
http://docs.lib.purdue.edu/icec/1777

This document has been made available through Purdue e-Pubs, a service of the Purdue University Libraries. Please contact epubs@purdue.edu for additional information.
Complete proceedings may be acquired in print and on CD-ROM directly from the Ray W. Herrick Laboratories at https://engineering.purdue.edu/Herrick/Events/orderlit.html

Innovative Free-piston Compressor Based on Generalized Conception of Compressors Driven by an Oscillating Electrical Motor

Sigitas KUDARAUSKAS[1], Rimantas DIDZIOKAS[1], Loreta SIMANYNIENE[2]

[1]Institut of Mechatronics
Klaipeda University
Bijunu 17, LT-91225 Klaipeda, Lithuania
Tel & Fax: 370-46-398692
E-mail: kudarauskas@klaipeda.omnitel.net, rididz@lrs.lt

[2]Department of Electrical Engineering
Klaipeda University
Bijunu 17, LT-91225 Klaipeda, Lithuania
Tel: 370-46-398658, Fax: 370-46-398682
E-mail: simanyniene@yahoo.com

Corresponding author: Sigitas Kudarauskas

ABSTRACT

This paper deals with generalized approach to the reciprocating piston compressor driven by oscillating electrical motor and possibilities of development of new structures of the device. The current term *linear compressor*, ipso facto, restricts the considered devices only with a linear motion of the piston. Therefore the more general term *oscillating motor-compressors* is used in the paper, in which the samples of the considered devices are analyzed. The structure of lately created innovative free-swinging pistons compressor driven by oscillating rotating electrical motor is presented in the paper. The proposed compressor has many advantages to compare with the traditional devices: compactness, reduced frictional losses, reduced wear of the pistons and cylinder surfaces, full balanced mechanical system without vibration of the frame, optimal magnetic circuit of the oscillating rotating electrical motor, etc. In this way the expedience of the generalized conception is demonstrated.

1. INTRODUCTION

The piston compressors driven by an oscillating electrical motor are well known. In this instance the compressor is a free-piston compressor, because the piston is connected directly with the movable part of oscillating motor without transformer of movement and without mechanical means limiting piston stroke. Consequently, the direct drive principle is realized in such device, because the properties of mechanical movement of the motor coincide with ones of the driving mechanism. In this way, structure of the device becomes simpler, cheaper, and mechanical losses are reduced.

The considered generalized conception, first of all, is related to classification of electrical machines according to peculiarities of movement, when the temporal and spatial properties of movement are treated as mutually independent (Kudarauskas, 2004). Studying compressors drives, electrical machines with periodical motion (that is, the *oscillating electrical machines*) must be pointed out. Thus, a specific temporal property of movement (the periodicity) identifies such machines; meanwhile the spatial property of movement (a trajectory) could be various.

A linear motion of the piston is used in contemporary conventional reciprocating piston compressors. Of course, the oscillating linear electrical motor is most suitable for such compressor drive. That is why, the term *linear*

compressor is used most frequently, taking into account that all moving bodies of such device move according to linear trajectory. But on the other hand, piston compressors driven by oscillating electrical motor with other trajectory are known too. That is why, the term *linear compressor* is not general for all such devices. Thus, further we will use the term *oscillating motor-compressor* as more adequate to the generalized conception of the considered devices (Kudarauskas and Senulis, 2003).

The further presentment in the paper of the lately created innovative oscillating motor-compressor illustrates validity of the generalized approach to the considered devices.

2. EXISTING OSCILLATING MOTOR-COMPRESSORS

In fact, actually we could mark the century of the oscillating motor-compressor, because Paul Boucheraut in France had tested the first compressor driven by oscillating electrical motor in the beginning of 20th century. In 1908, he had described these tests: *"I have installed small pomp with a big air flow and low pressure beside to apparatus and actuated it. Unfortunately, I don't have its photo… The air flow was commanded at choice acting the voltage or current. It was a simple experiment and I had not prolonged both the realization and measurement"* (Boucherot, 1908). This experiment was accomplished with the oscillating synchronous excited motor that used complex trajectory of the movable part depending of its elastic deformation.

Up to now, the oscillating motor-compressors are created for different application, especially for refrigerating, air conditioning equipment, for medical and health care equipment etc. This process notably intensifies of late years.

2.1 Movement trajectories in oscillating motor-compressors

As it was pointed out in the introduction, linear movement of the piston, as well as of the oscillating motor's movable part is used in majority of oscillating motor-compressors. As an instance, the structure of such device is shown in Figure 1 (Takahashi, 1976). Here we can see the single-sided piston compressor, driven by oscillating linear synchronous pulsating current motor. This simplest motor is asymmetrical having one winding with unidirectional current pulses.

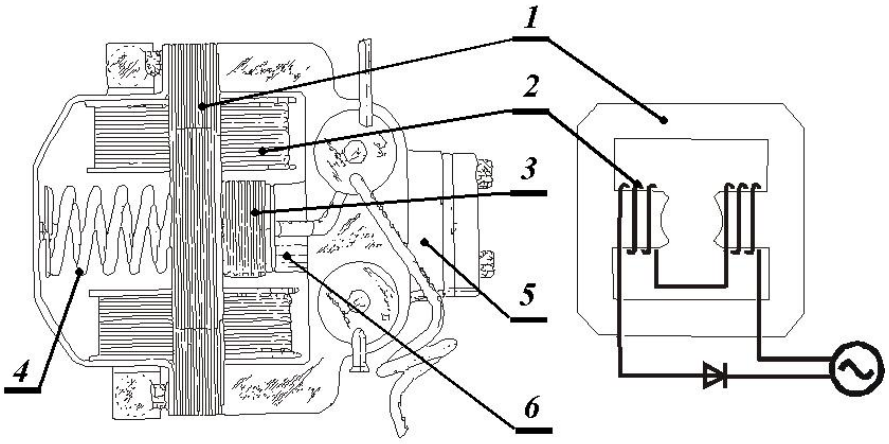

Figure 1: Compressor driven by oscillating linear electrical motor and electrical circuit;
1 – stator's core, 2 – winding, 3 – movable part, 4 – spring, 5 – cylinder, 6 – piston

There were proposed different variants of oscillating rotary motors to drive corresponding compressor. *Chausson Inc.* (France) created some variants of such oscillating motor-compressors during the period of 1955-66. The sample of such device is shown in Figure 2 (Chausson, 1961). Here the oscillating rotating synchronous exited motor is used. The exciting permanent magnets are arranged in the rotor. The working chambre of this single-sided piston compressor has a form of sector of torus ("crooked cylinder").

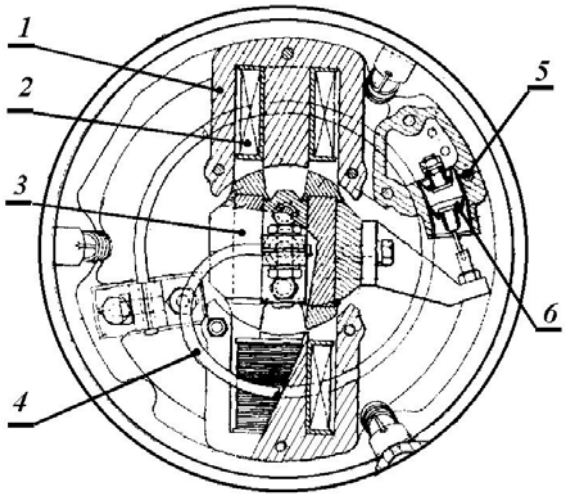

Figure 2: Compressor driven by oscillating rotating electrical motor; 1 – stator's core, 2 – winding, 3 – rotor, 4 – spring, 5 – cylinder, 6 – piston

We can find the device of *Chausson Inc.* with complex trajectory too. In Figure 3 such oscillating motor-compressor is depicted (Perrone, 1958). Deformation of the planar spring determines complexity of the trajectory. The planar suspending spring also plays role of the movable part guides. The working chambre of the compressor has form of the "crooked cylinder" too. In both these compressors of *Chausson Inc.* the elastic rubber pistons are used. Such piston plays role of the suction valve.

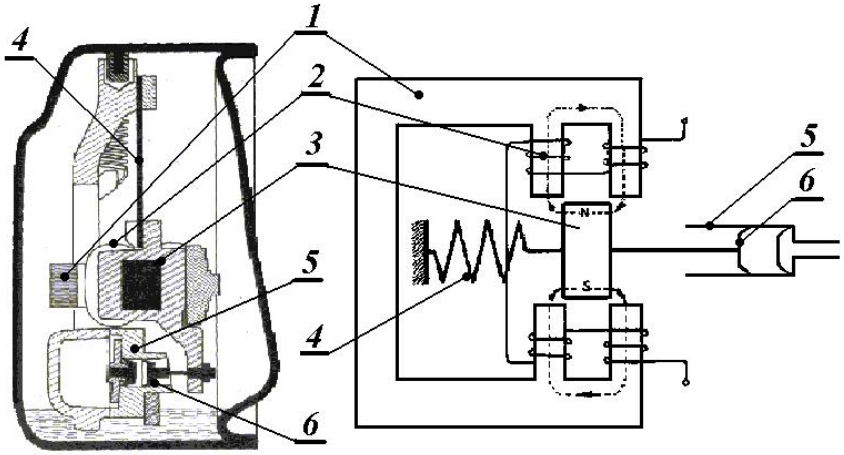

Figure 3: Section of the compressor driven by oscillating rotating electrical motor with complex trajectory and its scheme; 1 – stator's core, 2 – winding, 3 – movable part, 4 – spring, 5 – cylinder, 6 – piston

The contemporary oscillating motor-compressors, pumps, as a rule, are designed as devices of linear motion. As an example, the vacuum pump of *MEDO USA Inc.* (see: *www. Medousa.com*) is shown in Figure 4. By the look of device, we can state that there is single-sided pump (or corresponding compressor) driven by simplest oscillating linear electrical motor. The structure of such device is surely similar as one presented in Figure 1.

Figure 4: *Linear-Piston Vacuum Pump* VP0435A of *MEDO USA Inc.*

More complex structures of oscillating motor-compressor also are used. A doubling of the simplest structures can balance mechanical system of the device if two pistons oscillate in opposite direction. In this way, vibrations of the frame could be avoided. As an example, such device of *Sunpower Inc.* is presented in Figure 4 (Unger and Novotny, 2002). Here we can see two single-sided compressors arranged in opposite with common working chambre. Two analogous oscillating linear synchronous exited motors of cylindrical structure and with permanent magnets in the movable part are used. Each movable part of the device is connected with the packet of spiral shape planar springs, but the cylinder-piston sets (using the gas bearing technology) are applied as guides of the movable parts.

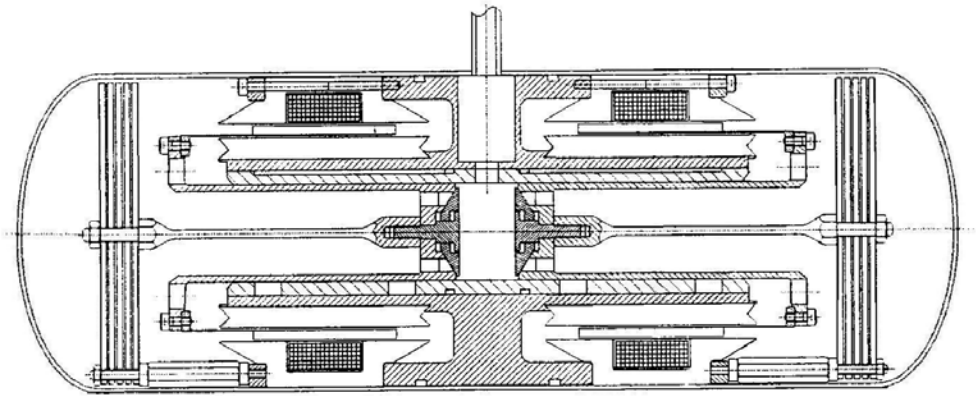

Figure 5: doubled compressor of *Sunpower Inc.*

Interesting oscillating electrical machines were created by John Corey (USA) – so called *STAR* machines (Corey and Yarr, 1992). Actually such motors/alternators are produced by *Qdrive Inc.*, that is, the oscillating electrical machine is manufactured as independent unit, but it can be applied with different piston devices (compressors, engines etc.). The sample of such machine is shown in Figure 6 (*STAR motor/alternator 1S132M/A*; see: *www.qdrive.com*). That is oscillating linear synchronous excited machine. Exciting permanent magnets are arranged in the star-shape movable part. The flexible suspension of the movable part is applied as guides of the mover. Two packages of the permanent magnets are displaced in longitudinal direction, and they engender a spring effect. Usage of such twin machines operating in opposition directions form well-balanced mechanical system and enables to avoid vibration of the frame (Corey *et al.*, 2004).

Figure 6: *STAR motor/alternator* of *Qdrive Inc.*(view with the piston)

Of course, there are used other variants of structure of the oscillating motor-compressors, but here only the prevalent designs are presented.

2.2 Problems of existing devices

Presented in the previous section short view of the existing oscillating motor-compressors enables to state some typical problems of these devices.

First of all, the problem of spring arises in many cases, especially if the single-sided compressor is used. A mechanical spring must balance kinetic energy of moving bodies, must balance continuos component of loading force of the single-sided compressor, can stabilize oscillation center. Unfortunately, the mechanical spring complicates the device and decreased its reliability. As we can see, various springs are used in the devices of Figures 1-5. Only in the machine of Figure 6 the magnetic spring is used instead mechanical one. However, in such structure the permanent magnets are utilized only partial.

On the other hand, it is possible to create springless oscillating motor-compressor (Kudarauskas *et al.*, 2005). In this end, as a rule, the double-sided compressor must be used. In principle, the compressor itself (that is, the compressed gas) can balance kinetic energy of the moving bodies. Thus, the idle space of such compressor could be useful. The principles of compatibility of parameters of different systems of the considered device we are formed on a basis of generalized theory of the oscillating electrical machines (Kudarauskas, 2004).

In all unbalanced mechanical systems (Figures 1-4), the problem of vibration of the frame exists. In such cases, the special suspension in the shell must be used (Figures 2-3), or the damping support must be applied, as it is visible in Figure 4. Consequently, the balanced mechanical system (e.g. Figure 5) is preferable to the unbalanced one.

Guides of the linear motion also present some problems due to increased friction losses to compare with losses in the rotation bearings. From this standpoint, the oscillating rotating electrical machines can be advantaged in comparison with linear ones. Thus, the oscillating rotating motor-compressor of Figure 2 should be expedient by its rotating guides. However, non-workability of the torus-shaped working chamber of compressor is essential imperfection of this device. So, the other form of the working chamber could be pursued.

3. FREE SWINGING PISTONS COMPRESSOR

Lately we have created an innovative *free swinging pistons heat machine* (Kudarauskas, 2005), which can be used as compressor, pump, internal or external combustion engine, expander. The non-traditional working chambers of the positive displacement heat machine with periodical motion are used in the proposed device.

3.1 Prototypes

The positive displacement compressors and other heat machines with non-traditional cylinder-piston set are known. For example, lately researchers and inventors of Brazil proposed such compressor (Kopelowicz *et al.*, 2005). In Figure 7 the principle of structure of the working chambers of this compressor and progressive positions of the pistons (or so-called *displacers*) are shown. Here the pistons of right-angle cross-section rotate in the cylindrical cavity.

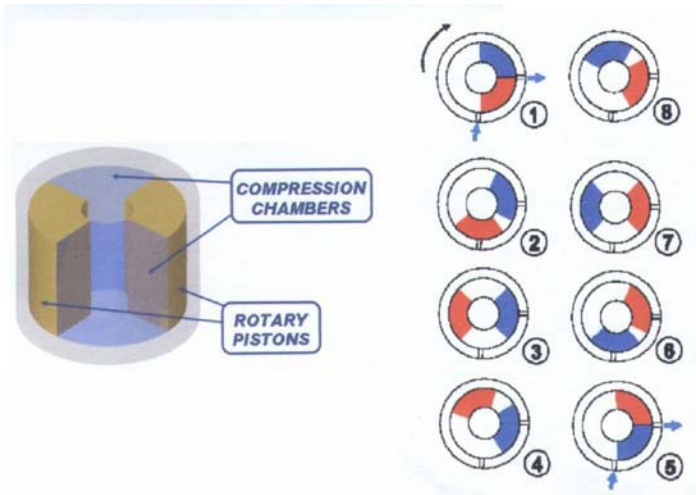

Figure 7: principle of structure of the compressor with variable speed rotary pistons (displacers) and progressive positions of the pistons

In spite of many advantages of the proposed compressor, the main imperfection of this device is that the variable speed of pistons is obtained by complex transformer of movement with many frictional pairs and other complications. For instance, the variable speed of pistons necessarily provokes vibrations of the device, therefore author's assertion about low vibration is doubtful.

There are known other devices with similar rotating or swinging pistons in the cylindrical cavity, but in all these devices the corresponding movement is achieved by appropriate mechanical means.

3.2 Innovative oscillating motor-compressor

The principle of structure of the innovative free swinging pistons heat machine (compressor) is shown in Figure 8 (Kudarauskas, 2005). The free swinging pistons heat machine comprises housing with a cylindrical cavity (e.g., formed by cylindrical ring 1 and covers 2, 3) in which two analogous assemblies of pistons 4, 5 are placed. The assembly of pistons consists of cylindrical hub 6 with two or more vanes (e.g., 5', 5") having form of symmetrical star. The assemblies of pistons could independently pivot around axis of the housing.

When the assemblies of pistons swing in opposite directions, the variable working chambers are formed. The number of working chambers is equal to total number of vanes of both assemblies of pistons. Any external device of the heat machine (driven or driving) is connected directly to the assemblies of pistons without transformer of movement. Different variants of such interconnection are provided (by the coaxial shafts, by the rods, by flat rings or cylindrical rings, which are arranged at the ends of vanes).

Concentric arrangement of the compressor with an oscillating rotating electrical motor is provided. The electrical motor has two rotors that are directly connected with assemblies of pistons. It is to note that an oscillating rotating electrical machine can be similar to the conventional electrical machines with optimal magnetic circuit.

Operation of any variant of the heat machine is based on the rotating (swinging) oscillation in opposite directions of the assemblies of pistons, which form certain number of working chambers (four, six, eight etc., depending on the number of vanes in the assemblies of pistons) between the adjacent vanes.

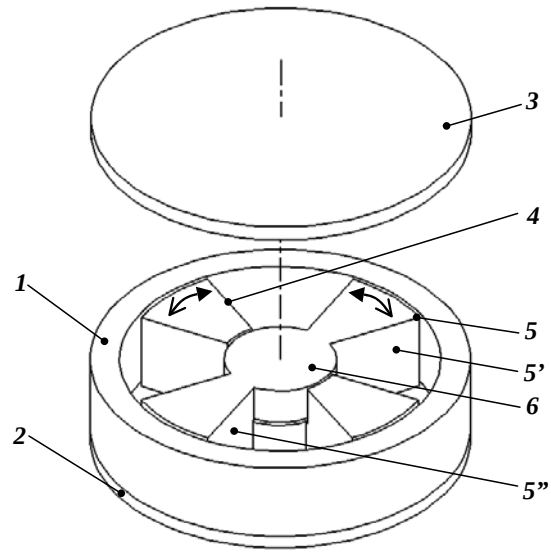

Figure 8: free swinging pistons heat machine (compressor)

Guidance of the assemblies of pistons could be realised by rotary bearings (including roller bearings) mounted in the hubs. This structure enables to avoid a friction between the swinging parts and housing, and simplifies solution of the sealing. The direct connection of external driven or driving devices without any transformer of mechanical movement also simplifies structure and reduces losses.

The free swinging pistons heat machine becomes a balanced mechanical system of three bodies, if the centres of mass of two swinging in opposite directions parties are located in the axis of rotation. Therefore operation of such machine does not provoke vibrations of the frame.

3.3 Advantages and problems of the innovative device

There are much advantages of the proposed invention compared to the known oscillating motor-compressors (especially to the so-called "linear compressors"). Namely:

- compactness – reduced volume and weight of the aggregate;
- drastically reduced frictional losses due to rotation of the movable parts (instead of linear motion) and their guidance by rotary bearings;
- reduced (or absent) wear of the pistons and cylinder (housing) surfaces, possibilities to simplify sealing and lubrication;
- balanced mechanical system, without vibration of the frame;
- advantages of the oscillating rotating electrical generator having closed magnetic circuit to compare with the oscillating linear electrical machine;
- simplicity and low cost of manufacture of the device.

At first sight, the problem of sealing of the cylinder and piston assemblies looks as very complicated. But in fact, this problem is comparable to the analogous problem of scroll, screw, rotary vane and other compressors. So, the possible solutions of this problem are known.

6. CONCLUSIONS

The analysis of existing oscillating motor-compressors and search of now structures of the device enables to conclude:

- Generalized approach to the positive displacement reciprocating compressors driven by an oscillating electrical motor consist in the treating of temporal and spatial properties of movement as mutually independent.

- There are oscillating motor-compressors with different trajectory of movement, therefore the term *linear compressor* does not covers all congeneric devices.
- On a basis of generalized conception of the considered devices, the innovative free swinging piston compressor is invented, which is advantaged in comparison with oscillating linear motor-compressors.

REFERENCES

Boucherot, P., 1908, Appareils et machines à courant et mouvement alternatifs, *Bulletin de la Société internationale des Électriciens*, Paris, décembre: p. 731-755.

Chausson, A., 1961, Improvements in or relating to Electromagnetically driven pumps, *Patent specification, UK*, N. 874489.

Corey, J., Yarr,.G., 1992, HOTS to WATTS: The FPSE Linear Alternator System Re-Invented, *Proc. of 27th Intersociety Energy Conversion Engineering Conference*: p. 5.289-5.294.

Corey, J., James, E., Kashani, A., Helvensteijn, B., Rhoads, G., 2004, Development of a Linear Compressor for Use in G-M Cryocoolers, *Proc. of International Cryocooler Converence in New Orleans.*

Kopelowicz, H., Siqueira, C., Moutella, F., Areas, H., Parise, J., 2005, Experimental evaluation of an innovative rotary compressor with variable speed displacers, *Proc. of International Conference on Compressors and their Systems, London*, J.Wiley & Sons: p. 101-108.

Kudarauskas, S., Senulis, A., 2003, Historical development and theoretical principles of compressors driven by oscillating electrical motor, *ImechE Conference Transactions*, Professional Engineering Publishing, London: p. 473-482.

Kudarauskas, S., 2004, *Introduction to Oscillating Electrical Machines*, Edit. of Klaipeda University, Klaipeda, Lithuania, 183 p.

Kudarauskas, S., 2005, Free swinging pistons heat machine, *Lithuanian pending patent*, N. 2005 046.

Kudarauskas, S., Didziokas, R., Simanyniene, L., Senulis, A., 2005, Problems and possibilities of the springless oscillating motor-compressor, *Proc. of International Conference on Compressors and their Systems, London*, J.Wiley & Sons: p. 61-70.

Perronne, G., 1958, Compresseurs électromagnétiques oscillants, *Bulletin d'Institut International du Froid*, N. 2: p. 267-278.

Takahashi, S., 1976, Compresseur électromagnétique perfectionné su type fermé, *Brevet d'Invention, République Française*, N. 2306347.

Unger, R., Novotny, S., 2002, A High Performance Linear Compressor for CPU Cooling, *Proc. of 16th Int. Compressor Engineering Conference at Purdue*, Paper C23-3.