Purdue University
Purdue e-Pubs

International Compressor Engineering Conference | School of Mechanical Engineering

2006

Motion Analysis of Compact Rotating Cylinder Compressor

Nelik Dreiman
Tecumseh Products Company

Rick Bunch
Tecumseh Products Company

Follow this and additional works at: http://docs.lib.purdue.edu/icec

Dreiman, Nelik and Bunch, Rick, "Motion Analysis of Compact Rotating Cylinder Compressor" (2006). *International Compressor Engineering Conference*. Paper 1754.
http://docs.lib.purdue.edu/icec/1754

This document has been made available through Purdue e-Pubs, a service of the Purdue University Libraries. Please contact epubs@purdue.edu for additional information.
Complete proceedings may be acquired in print and on CD-ROM directly from the Ray W. Herrick Laboratories at https://engineering.purdue.edu/Herrick/Events/orderlit.html

MOTION ANALYSIS OF COMPACT ROTATING CYLINDER COMPRESSOR

Nelik Dreiman*), Ph.D, Senior Project Engineer. Tel.: 517/ 423 – 8582;
FAX: 517/ 423 – 8426; E-mail: ndreiman@tecumseh.com
Rick Bunch, Vice-President of Engineering, Tel.: 517/ 423 – 8246;
FAX: 517/ 423 – 8426; E-mail: rbunch@tecumseh.com
Tecumseh Products Company, 100E. Patterson St., Tecumseh, MI 49286 USA
*) Corresponding Author.

ABSTRACT

The mechanical structure of a new rotary compressor and its operating principle is introduced in this paper. The crankshaft of the compressor is stationary. The motor-rotor, cylinder block and vane are formed as integral part, which rotates around axis of the stationary crankshaft in the magnetic field created by the motor-stator. The eccentrically mounted roller driven by the interaction with the vane rotates synchronously with the cylinder block. The vane is clamped without clearance between inner sides of heads to which free end of the vane is fixed. Analysis indicates that leakage and frictional losses have been eliminated at the following location: vane tip - roller O.D., vane ends - facing surfaces of the cylinder heads, and vane sides-slot sides of the rotor-cylinder.

1. INTRODUCTION

In the last few years' carbon dioxide received increasing attention as possible replacement of fluorocarbon-based refrigerants used at present for vapor compression cycle technology. One concern with R –744 refrigerants is the effect of high operating pressure. Large difference between discharge and suction pressures will trigger higher leaks and friction losses, increased load on the bearings, etc in contemporary rotary compressors. Fatigue problems due to higher impact velocities (lift and closure of the valve, for example) when compressing such a relatively dense gas, as CO_2 (density is ≈ 5 times higher than that of
R-22) must be also considered. The conventional rotary compressors embodied a stationary cylinder block provided with peripheral movable vane engaged directly with the wall of an eccentrically mounted roller. The vane has to be holding against the roller wall through the action of spring, back gas pressure and is movable upon the cylinder block. Use of CO_2 as the refrigerant will increase frictional and leak losses and will affect performance and life span of the contemporary rotary compressor. A prototype compact hermetic rotary compressor has been developed for use with carbon dioxide to overcome problems specified above [Dreiman N., Bunch R., 2005***a***].

2. OPERATING PRINCIPLE

The mechanical structure and operating principle of the rotating cylinder rotary compressor is in some degree similar to that of contemporary rotary sliding vane or swing type compressor. The difference is that the crankshaft of new compressor does not rotate. The motor-rotor, cylinder block and vane are assembled as integral part (rotor-cylinder), which rotates around axis of the stationary crankshaft in the magnetic field created by the motor-stator. The eccentrically mounted roller driven by the interaction with the vane rotates synchronously with the rotor-cylinder. Fig.1 shows schematic sectional views of the progressive positions for the integral cylinder block-vane and roller during operating cycle of the compressor.

3. MOTION ANALYSIS

3.1. Kinematics of the compressor

The rotor- cylinder and roller can be considered consequently as external cylinder (driver) and internal cylinder (follower) having rolling contact in point P with transmission of the motion from the driver to the follower through the rigid link C (coupler). The external and internal cylinders will rotate in one direction. According to the structure, the vane presented in Fig.2 as link **C**, separates suction and compression sides and extends radially inward toward rotor-cylinder center of rotation $\mathbf{O_C}$ through the center of the bushing

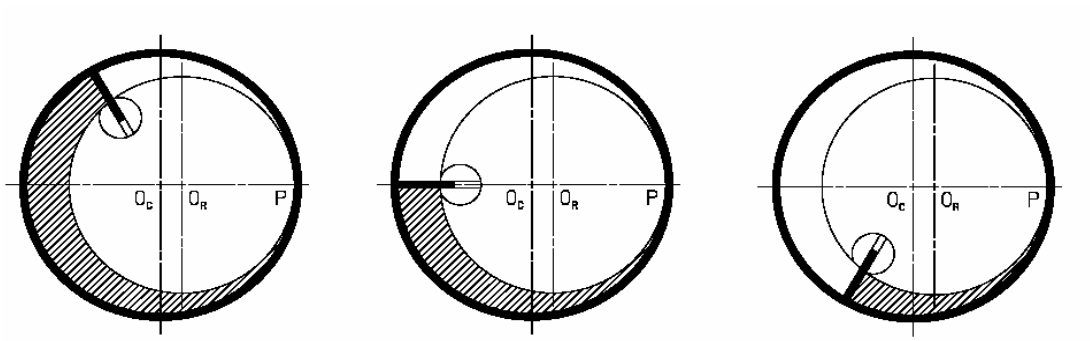

Fig.1. Progressive positions of the integral cylinder block-vane and roller during operating cycle.

mounted in the roller. The line connected rotor-cylinder center $\mathbf{O_C}$ and point $\mathbf{P_R}$ **(**see Fig.2A**)** is considered as the part of rotational link with $\mathbf{O_C P_R} = \mathbf{d}$, $\mathbf{O_C}$ and roller center $\mathbf{O_R}$ are individually taken as the two immovable points of the mechanism with $\mathbf{O_C O_R} = \mathbf{e}$ (fixed link)**.** The line $\mathbf{O_R P_R} = \mathbf{f}$ considered as a follower. The equation of motion of the compressor elements such as integral rotor- cylinder – vane, roller and roller bushing can be derived by choosing the orthogonal coordinate system fixed to the stationary crankshaft with origin in rotor-cylinder-vane center $\mathbf{O_C}$, the $\boldsymbol{x}$ axis lie along common line, namely the line of centers directed to the point of contact **P** and the z axis coincided with the stationary crankshaft axis. For plane triangle $\nabla \mathbf{O_C P_R O_R}$ (see Fig. 2A), as per the Law of Sines and the Law of Cosines

$$\mathbf{e}\, sin\theta = \mathbf{f}\, sin\varphi \quad ; \qquad \mathbf{d} = \mathbf{e}\, cos\theta + f\, cos\varphi \qquad (1)$$

Due to the fact that the rotor-cylinder-vane is integral part and rotates as one solid body around z-axis, there is no reciprocating movement of the vane. The flats of the bushing implanted in the roller slide along the suction and discharge sides of the vane with change of the rotor-cylinder turning angle θ. The part of the vane $\mathbf{L}(\theta)$ exposed to the suction and discharge pressure inside of the working chamber will be

$$\mathbf{L}(\theta) = \mathbf{P_R P_C} = \mathbf{R_C} - \mathbf{d}\,, \qquad (2)$$

where radius of the cylinder $\mathbf{R_C} = \mathbf{R_R} + \mathbf{e}$ and radius of the roller $\mathbf{R_R} = \mathbf{f}$. After substitution and transformation exposed length of the vane can be expressed as

$$\mathbf{L}(\theta) = \mathbf{e}\,(1 - cos\theta) + \mathbf{f}\,\{1 - [1 - (\lambda sin\theta)^2]^{1/2}\}\,, \qquad (3)$$

where $\lambda = \mathbf{e} / \mathbf{f}$. We can use binominal series shown below for the last term of the Eq.3

$$(a + b)^n = a^n + n\, a^{n-1}\, b + n\,(n-1)/2!\,[a^{n-2}\, b^2] + n(n-1)(n-2)/3!\,[a^{n-3}\, b^3]\ \ldots.$$

with $a = 1$, $b = -(\lambda sin\theta)^2$ and $n = ½$. After expanding the root into a binominal expansion with inclusion of the first two terms as the series rapidly converges, we obtain

$$\mathbf{L}(\theta) = \mathbf{e}\,(1 - cos\theta + \lambda^2/2\, sin^2\theta - \lambda^3\, sin^4\theta / 8 + \ldots\ldots) \qquad (4)$$

Thus the length of the exposed part of the vane very approximately (error 0.15%) will be:

$$\mathbf{L}(\theta) = \mathbf{e}\,(1 - cos\theta + \lambda^2/2\ sin^2\theta) \qquad (5)$$

The bushing inside of the roller cavity slides along the vane sides and turns to accommodate vane with the change of the rotor-cylinder position. Differentiating Eq.(5) with respect to time and denoting $d\theta/dt = \omega$ we obtain the sliding speed V_{BV} between the bushing and vane with change of the turning angle.

$$V_{BV} = e\,\omega(\sin\theta + \lambda^2/2\ \sin 2\theta) \qquad (6)$$

where ω is angular velocity of the rotor-cylinder. The roller bushing turning angle φ_1 (see Fig.2B) with change of the vane rotational angle θ will be

$$\varphi_1 = \arcsin\ [\,e\sin\theta/(R_R - R_B)\,] \qquad (7)$$

where R_B is the radius of the roller bushing. The values of the bushing turning angle φ_1 and exposed vane length **L** (θ) with change of the rotational angle θ in the limits 0-2π (single revolution) are shown in Fig.3.

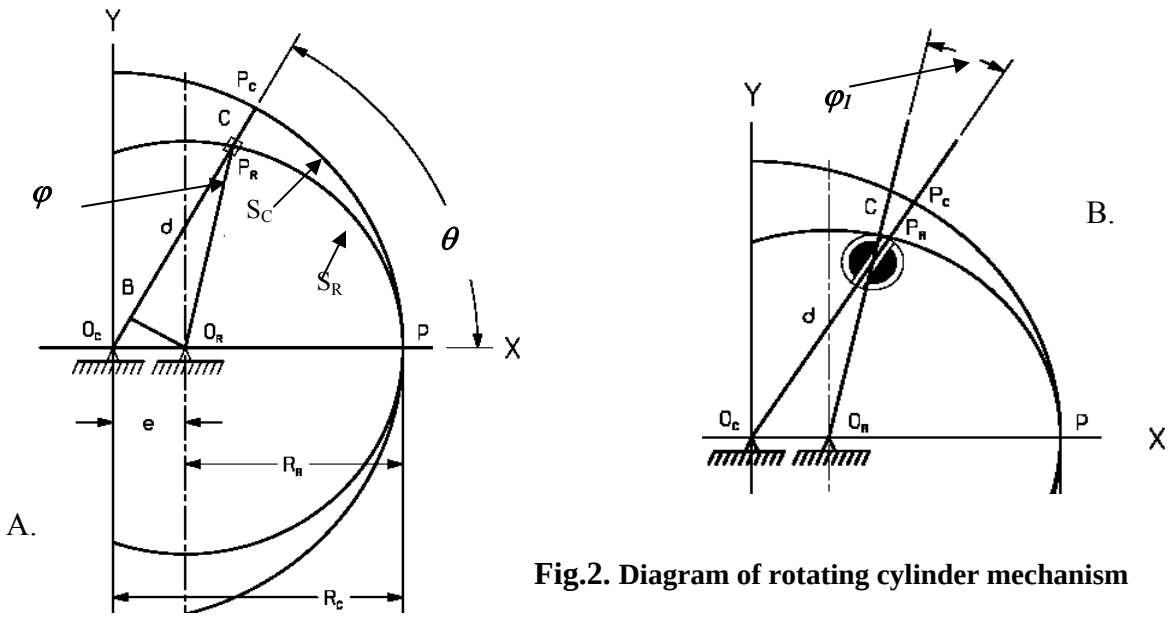

Fig.2. Diagram of rotating cylinder mechanism

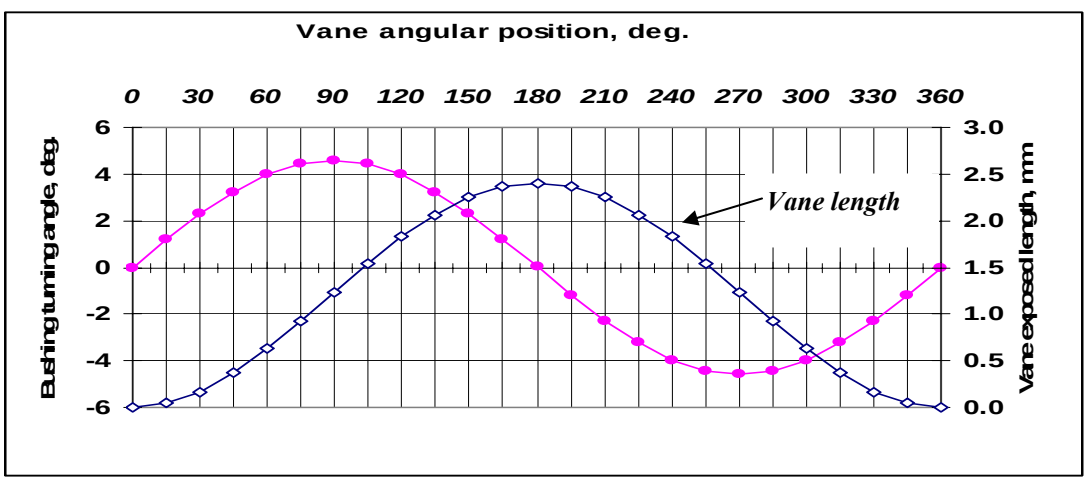

Fig.3. Turning angle of vane bushing and exposed length of the vane with change of the rotational angle.

Fig.3 shows that the bushing has $\pm$4.5˚ oscillating motion in the roller cavity per single revolution of the rotor-cylinder block for the specified exposed length of the vane. The extreme values of the turning angle have been

observed at 90˚ and 270˚ of the working cycle for the chosen system of orthogonal coordinates. The vane's maximum exposed length has been recorded at 180˚ circular position of the rotor-cylinder block.

3.2 Piston- swept volume

The swept volume $\mathbf{V}(\theta)$ of the working chamber at an arbitrary angle of the vane is

$$\mathbf{V}(\theta) = \mathbf{A}(\theta)\,\mathbf{h}, \qquad (8)$$

where **h** is the height of the cylinder and $\mathbf{A}(\theta)$ is the area of compression chamber at an arbitrary angle θ of the vane position as shown in Fig.4

$$\mathbf{A}(\theta) = \int_{\theta}^{\theta} (R_C^2 - d^2)\, d\theta = \int_{\theta}^{\theta} [R_R^2 (1+\lambda)^2 - d^2]\, d\theta, \qquad (9)$$

where

$$d = R_C - L(\theta) = R_R(1+\lambda\cos\theta - \lambda^2/2\sin^2\theta) \qquad (10)$$

or

$$d^2 = R_R^2\,(1 + 2\lambda\cos\theta + \lambda^2\cos 2\theta) \qquad (11)$$

if we neglect the terms containing λ^3 and λ^4 due to the small value.

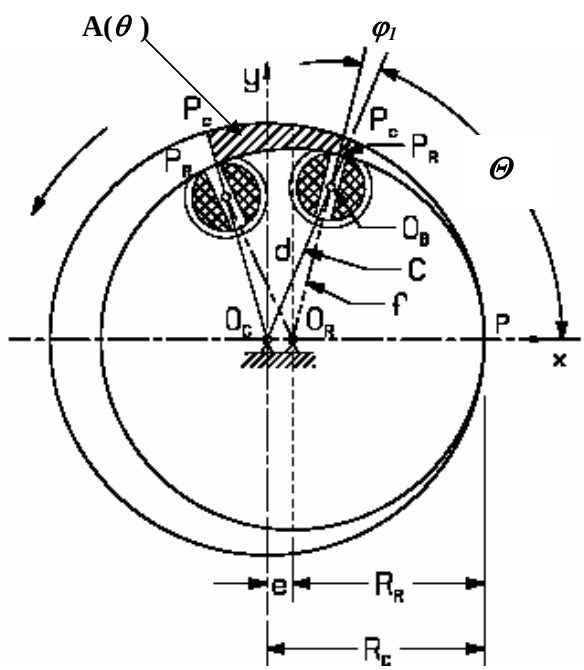

Fig.4. Displacement volume of a rotating cylinder compressor.

Refer back to Eq. 7 and Fig.4 the compression chamber volume trapped within cylinder, vane and roller at an arbitrary angle θ

$$\mathbf{V}(\theta) = \lambda\,\mathbf{h}\,R_R^2 / 2\,[\,(1+\lambda)\,\theta - 2\sin\theta - \lambda/2\,\sin 2\theta\,] \qquad (12)$$

In this calculation we have neglected the volume occupied by the vane. The compression volume given by Eq. **(12)** has to be reduced by the volume of the exposed part of the vane in the working chamber:

$$V_1(\theta) = V(\theta) - h\,t\,L(\theta) = V(\theta) - e\,h\,t\,(1 - \cos\theta + \lambda^2/2\ \sin^2\theta), \qquad (13)$$

where t is the thickness of the vane.

3.3. Velocity

Motion of external cylinder is transmitted to the internal cylinder through the driving link **C.** If driving link **C** rotates counterclockwise with constant angular velocity, the follower will revolve in the same direction at a varying (accelerating and decelerating) speed. The relative velocity between the cylinders is a function of the driver angle θ, radii of the contact cylinders, centers distance. The linear velocities of the cylinder v_C and roller v_R are shown below:

$$v_C = dS_C / dt = \omega\, dS_C / d\theta = \omega R_C \qquad (14)$$

$$v_R = dS_R / dt = \omega\, d\left[\int_0^{\theta} d\, d\theta\right] / d\theta = \omega\, d \qquad (15)$$

where S_C and S_R are revolving arcs of the cylinder and roller. The relative velocity of the roller to the cylinder

$$\Delta v = \omega\,(R_C - d) \qquad (16)$$

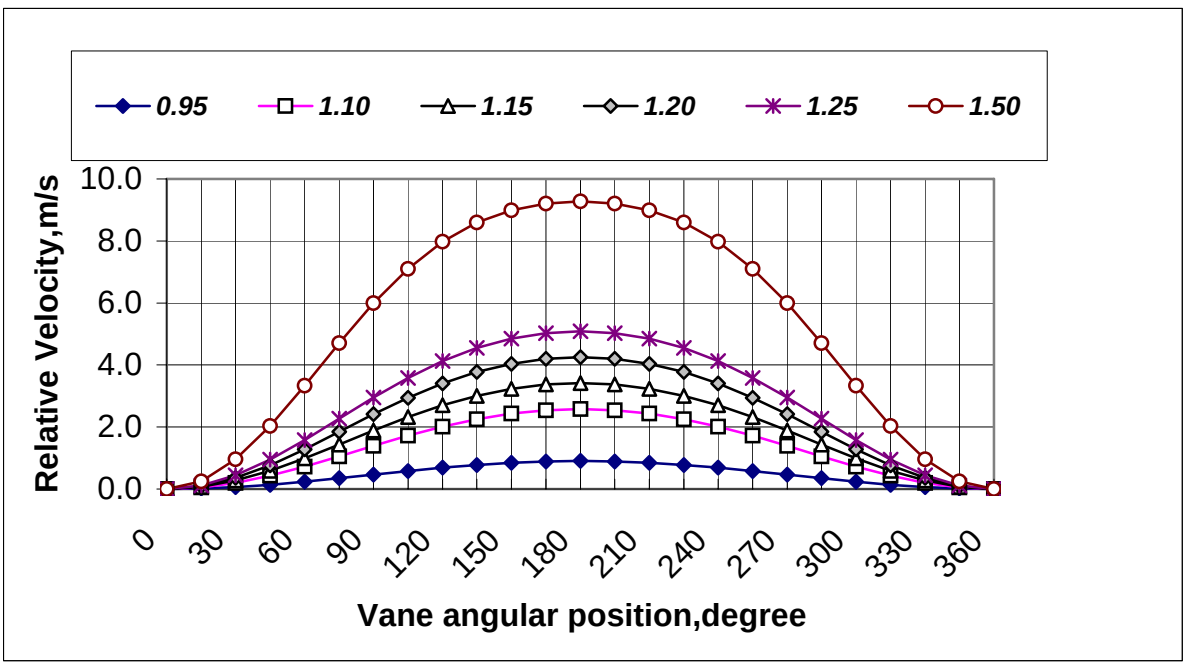

Fig.5. Effect of the radii ratio on the relative velocity.

Taking derivative we find that

$$dv/dt = \omega\,[\,(d\mathrm{d} / d\theta)(d\theta / dt) = \omega^2(d\mathrm{d} / dt) = -\omega^2\,\lambda\,R_R \sin\theta\,(1+\lambda/2\cos\theta) \qquad (17)$$

The extreme values of the roller relative velocity are shown below:

$$\Delta v_{max} = 2\omega\,(R_C - R_R) \qquad (18)$$

$$\Delta v_{min} = 0 \qquad (19)$$

Effect of the R_C / R_R ratio on the values of the relative velocity between the roller and the cylinder at different vane angular positions is shown in Fig.5. It is shown that rather smaller ratio give us lower relative velocity between rotating in one direction roller and cylinder.

4. STRUCTURE OF THE COMPRESSOR

A prototype compact rotary compressor has been developed for use with carbon dioxide as natural working fluid [Dreiman N., 2005b]. Compact rotary hermetic compressor shown in Fig.6 comprises a motor, the cylinder block cavity and vane machined in the core of said motor-rotor so, that it formed integral rotor-cylinder block -vane part (rotor-cylinder, see Fig.7), the roller to rotate with the integral rotor-cylinder about an axis eccentric to the crankshaft axis of the rotor-cylinder. The vane projects inwardly from the circular wall in substantially radial line and opposite side edges of the vane engage the opposed inwardly facing surfaces of the heads, so that the vane is clamped without clearance between the inner sides of said heads which are immovably fixed to the rotor-cylinder in order to form an enclosed casing in which said vane and the roller are mounted. The impelling vane has been fixed at the free end by pin, which connects heads and said vane together. The vane can be considered as cantilever rectangular beam loaded transversely by the pressure differential forces across the vane within the cylinder. Reaction forces and vertical shear for the beam supported at both ends are twice less than that for single end support.

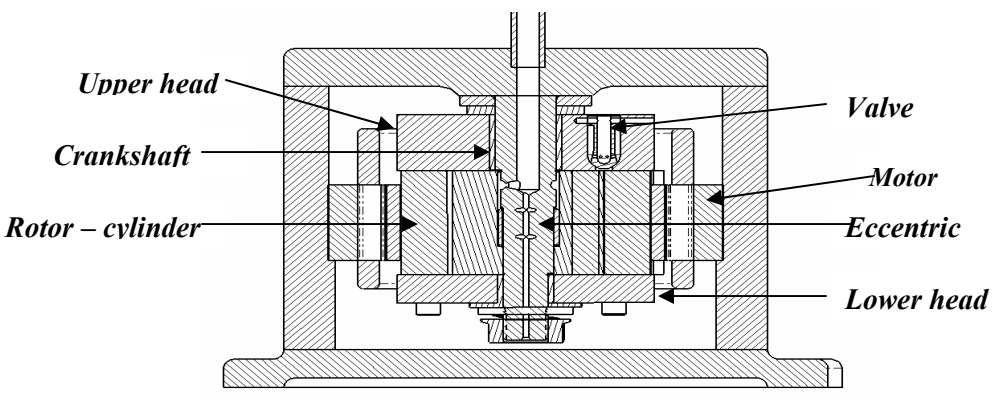

Fig.6. Longitudinal cross-sectional view of rotary oscillating-roller compressor

The vane extends into transverse cylindrical pocket open through periphery of the roller in which are rotatably fitted bushing, preferably formed by segmental cylindrical blocks, the flat surfaces of which are machined to slidingly engage upon the opposed surfaces of the vane with only operating clearance.

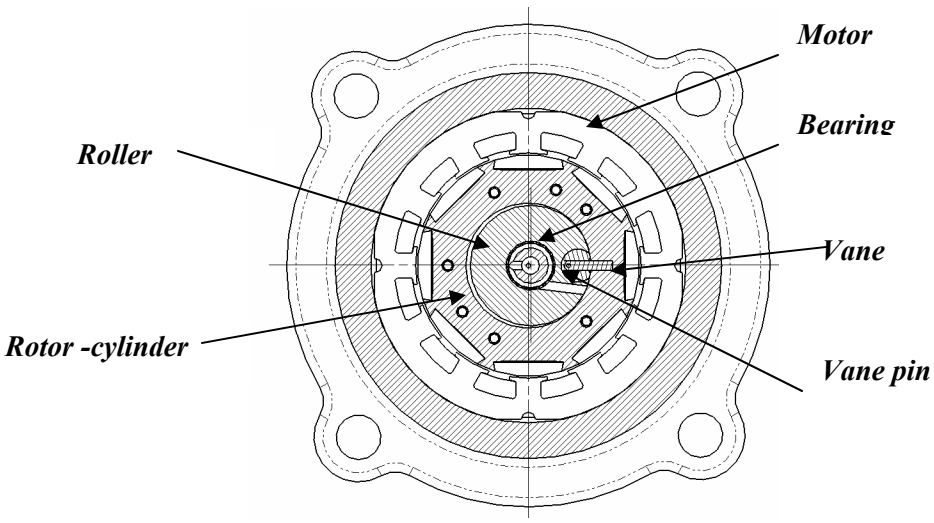

Fig.7. The cross-sectional view of the compressor in vicinity of the rotor-cylinder.

5. LEAKAGE AND FRICTIONAL LOSSES.

Rolling piston type compressors operate with clearances between moving parts, which induce internal leakage flows and associated leakage losses that affected the delivered flow of refrigerant, reducing the cooling capacity, volumetric efficiency and, consequently, increase the power consumed by the compressor. Analytical and experimental studies of rolling piston compressors indicate that dominant leakages occur at the radial clearance between the roller O.D. and cylinder I.D. and through the clearances between vane sides and facing surfaces of the cylinder [Costa, C., 1990]. The leakages through the roller radial, roller axial and vane axial clearances have great impact on the performance of the compressor
[Wu J., 2000].

Table. Relative Compressor Losses

Point (line) of contact	***Frictional Losses, %.***		***Leakage flow fraction losses*)***	
	Conventional Rotary, [Costa, 1990]	**Rotating Cylinder, (expect.)**	**Conventional Rotary, [Wu, J., 2000]**	**Rotating Cylinder, (expect.)**
Roller O.D- Vane tip	**24.3**	***Eliminated***	**0.0025**	***Eliminated***
Roller O.D-Cylinder I.D.	**1.0**	**1.0**	**0.0309**	**0.0309**
Roller I.D-Eccentric	**18.7**	***18.7***	**---**	**---**
Roller ends-Cylinder heads	**2.7**	***2.7***	**0.0294**	**0.0294**
Vane ends- Cylinder heads	**N/A**	***Eliminated***	**0.0005**	***Eliminated***
Vane sides-Slot sides	**28.1**	***Eliminated***	**0.0310**	***Eliminated***
Crankshaft- Bearings.	**25.2**	**26.13**	**---**	**---**
Vane sides-bushing block	**-**	**25.67**	**---**	**0.0310**
Bushing –pocket wall	**-**	**4.82**	**---**	**---**
Sub-Total	**-**	**-**	**0.0943**	**0.0913**
Total Loss, %	**100**	**79.02**	**100**	**81.97**

*) Leakage flow fraction relative to delivered suction volume

Due to the fact that in the developed rotary compressor the rotor- cylinder, heads, vane are secured together and rotate as one solid body there is no movement of the vane in the slot of the rotor-cylinder and relative movement upon the inward facing surfaces of the heads as in contemporary rotary or swing type compressors. Analysis of leakage and frictional losses shows that the losses have been eliminated in rotating cylinder type compressor at the following locations:

- Vane tip-roller O.D. There is no contact and radial gap between the vane and the roller.
- Vane edges - facing surfaces of the cylinder heads. The vane is stationary. There are no operating clearances between the cylinder heads and vane ends facing surfaces.
- Vane sides- slot sides in the cylinder block. Stationary vane is integral part of the rotor-cylinder. There is no high – low side axial gaps and slot-slide boundary friction usual in contemporary rotary compressors. Preliminary general evaluation shows (see Table) that mechanical relative losses of the developed compressor can be up to 20% lower than the losses of a conventional compressor and expected reduction of the leakage is around 12%.

Developed compact hermetic rotating cylinder compressor does not required pressure on the back of the vane for proper operation, so it can be designed as low side or high side compressor.

6. CONCLUSIONS.

The leakage and frictional losses in new oscillating rotary compressor are relatively lower than in contemporary rotary compressors due to elimination of the vane radial movement and synchronous rotation in one direction of the integral rotor-cylinder- vane and roller with small relative velocity.
A combined design in which the armature of the electric motor forms part of the integral cylinder block and vane reduce number of the parts and provide comparatively compact, small, well balanced, reliable and efficient rotary compressor.

REFERENCES

Costa, C., et al., ***1990,*** ”Consideration About the Leakage Through the Minimal Clearance in a Rolling Piston Compressor”. Int.Comp.Eng.Conf. at Purdue, pp. 853-862.
Dreiman N.I., Bunch R.L., 2005a, “Compact Rotary Compressor” *USA Patent 20050031465.* Assignee: Tecumseh Products Co., International Cl. FO4B 035/04
Dreiman N.I., 2005b “Compact Rotary Compressor with Carbon Dioxide as Working Fluid ” *USA Patent 2005020884.* Assignee: Tecumseh Products Co., International.Cl.F01C 001/00;F04C 018/00; F03C 002/00
Wu J., 2000, “A Mathematical Model for Internal Leakage in a Rotary Compressor. Int.Comp.Eng.Conf. at Purdue, pp. 483-490