Purdue University
Purdue e-Pubs

International Refrigeration and Air Conditioning Conference

School of Mechanical Engineering

2010

Design and Experimental Investigation of a Small Scale Organic Rankine Cycle Using a Scroll Expander

Sebastian Declaye
University of Liège

Sylvain Quoilin
University of Liège

Vincent Lemort
University of Liège

Follow this and additional works at: http://docs.lib.purdue.edu/iracc

Declaye, Sebastian; Quoilin, Sylvain; and Lemort, Vincent, "Design and Experimental Investigation of a Small Scale Organic Rankine Cycle Using a Scroll Expander" (2010). *International Refrigeration and Air Conditioning Conference.* Paper 1153.
http://docs.lib.purdue.edu/iracc/1153

This document has been made available through Purdue e-Pubs, a service of the Purdue University Libraries. Please contact epubs@purdue.edu for additional information.
Complete proceedings may be acquired in print and on CD-ROM directly from the Ray W. Herrick Laboratories at https://engineering.purdue.edu/Herrick/Events/orderlit.html

Design and Experimental Investigation of a Small-Scale Organic Rankine Cycle Using a Scroll Expander

Sébastien DECLAYE[1]*, Sylvain QUOILIN[1], Vincent LEMORT[1]

[1]Laboratoire de thermodynamique - Université de Liège
Liège, Belgium

* Corresponding Author

ABSTRACT

This paper presents a study carried out on a prototype of small scale organic Rankine cycle (ORC) driven by two waste heat hot air streams. The tests were performed with two different fluids to study the performance of the ORC system and of the expander over a wide range of working conditions. The temperature of the heat sources varied between 150°C and 200°C. The maximum expander shaft power was above 2kW and maximum expander efficiency was 70%.

1. INTRODUCTION

The world is facing a historical increase in energy demand and energy consumption. As consequence the conventional fossil fuels are depleting faster with an inherent pollution causing sever damages to our environment. Renewable energy sources are considered as a solution to both environmental issue and energy demand. At the same time a lot of waste heat is lost in processes in industries and other thermal devices such as internal combustion engines. The organic Rankine cycle appeared to us as a solution to recover this heat wasted. In the process of designing an organic Rankine cycle, the selection of the fluid is of key importance. Several previous works (Badr *et al.*, 1985; Saleh *et al.*, 2007; B.F. Tchantche, 2010) aim at comparing theoretically organic fluids regarding to their thermodynamic performance, their environmental behavior and/or their influence on system cost. This paper aims at comparing experimentally two different organic working fluids.

2. TEST BENCH DESCRIPTION

An ORC test rig was set up in order to test several fluids. The heat source is made up of two hot air streams characterized by the same mass flow rate but slightly different temperatures. The temperature of the first hot air stream ranges from 150 to 200°C while the one of the second hot air stream varies between 120°C and 160°C. The heat sink is cold water at around 10°C. Figure 1 shows a scheme of the test bench.

2.1 Components

The evaporator is composed of three plate heat exchangers and the configuration was selected in order to recover as much thermal power as possible. The condenser is composed of two heat exchangers, connected by a set of valves. These valves allow the selection between a parallel and a series configuration on the refrigerant side. Both configurations will be compared in terms of pressure drops and heat transfer efficiency.

In order to control accurately the liquid subcooling at the condenser exhaust, a liquid receiver and an additional plate heat exchanger (the subcooler) are added between the condenser and the pumps. In practice, is mounted under the liquid receiver in order to avoid any vapour phase in the heat exchanger.

The expander selected for the test bench is a 122cc oil-free open drive air scroll compressor which has a built-in volume ratio of 3.94. This machine was converted into an expander, which required no modification except the removal of the cooling fan. As a consequence of the high GWP (global warming potential) and cost of the tested fluids, the amount of refrigerant released to the atmosphere during tests should be kept as low as possible. This is an issue with the expander selected for this test bench, because the original machine, an air compressor, is not air tight. The ideal configuration regarding the tightness would be a hermetic expander. In order to decrease the external leakages, the expander is enclosed inside a hermetic container. The shaft tightness is ensured by a shaft seal which can handle a pressure difference of 9 bar and a rotational speed of 3500 RPM.

In order to accurately control the flow rate in both refrigerant lines of the evaporator, two diaphragm metering pumps are selected. The pump flow rate can be adjusted by modifying the stroke length of the piston from 0 to 100%.

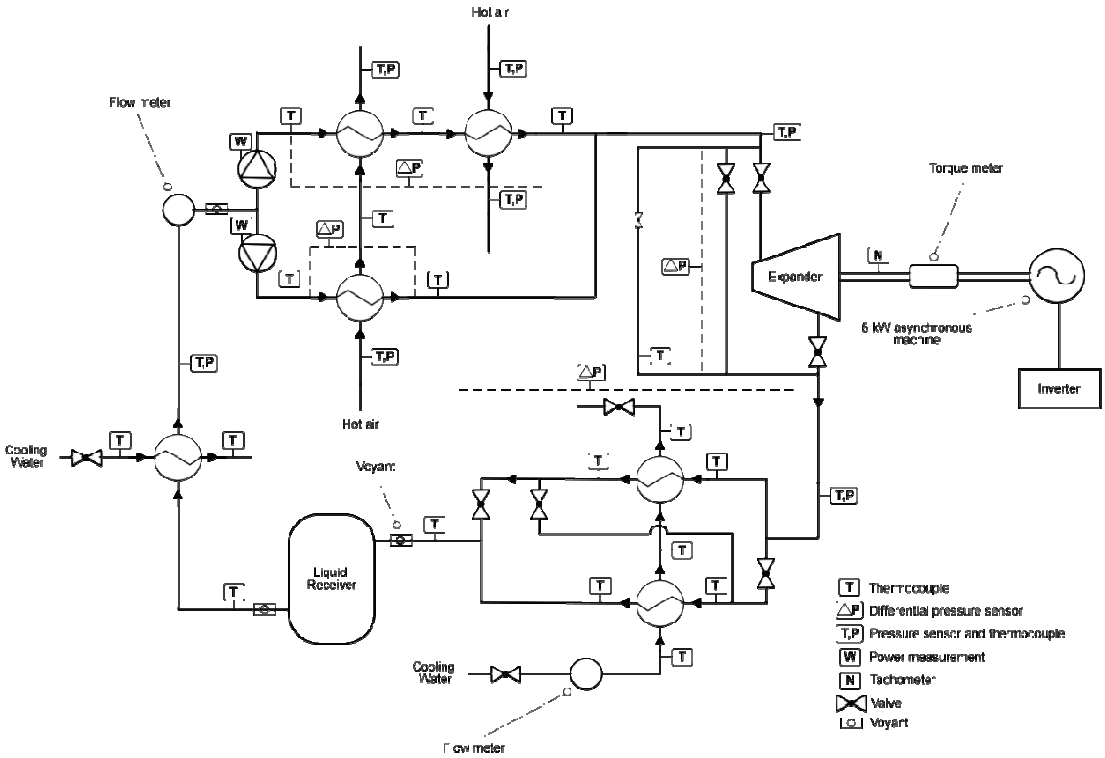

Figure 1 : scheme of the organic Rankine cycle test bench

2.2 Measurement devices

All temperatures are measured with Class 1 T-type thermocouples (copper-constantan) which are suited for measurements in -200 to 350°C range. Cold-junctions are kept in an ice bath.

Eight pressure sensors and four differential pressure sensors are installed on the test bench. Absolute pressure is measured at condenser supply, pump supply and expander supply. Pressure drops are measured over the condenser, the evaporator and the expander.

The refrigerant flow rate is measured by means of a Coriolis flow meter with a 0.1% full-scale accuracy.

In order the measure mechanical output power, the expander is connected to a 5kW asynchronous machine by the intermediary of a torque meter. The asynchronous machine is connected to an inverter in order to control its rotational speed by changing the frequency. The inverter range of frequency is 0 to 104Hz. Since the nominal speed of the asynchronous machine is 1500 RPM, the frequency range allows setting the expander rotational speed from 0 to 3120 RPM.

An electricity counter is installed in order to measure the pump consumption.

3. FLUID SELECTION

3.1 Model description

In order to select fluids to be tested, a pre-design model of the cycle was developed under EES. The main modeling assumptions are:

- Constant temperature pinch points (5K) in the evaporators and condensers.
- A pump isentropic efficiency of 60%
- A subcooling of 5K at the condenser exhaust
- An overheating of 5K at the evaporator exhaust

Concerning the expander, previous studies [Lemort *et al.*, 2009] showed that, for this type of oil free scroll expander, the evolution of the expander efficiency with the imposed working conditions (for instance, versus the pressure ratio) is mainly affected by the built-in volumetric ratio of the machine. The effect of others sources of loss (pressure drops, heat transfer ...) is to limit the expander efficiency around 70%, but remain quite constant with different working conditions. The expander simplified model is thus constituted of two steps:

- An isentropic expansion from supply pressure to adapted pressure corresponding to the built-in volumetric ratio.
- An expansion at constant machine volume from adapted pressure to exhaust pressure.

The efficiency of the machine is then limited to 70% in the case of a perfect match of built in volume ratio and volume ratio imposed on the machine.

For all simulations, temperatures of heat sources are set to 190°C for the first one and 160°C for the second one. The flow rate of both sources is set to 0.09 kg/s. Temperature and flow rate of heat sink are respectively set to 20°C and 0.5 kg/s.

3.2 Degree of freedom and objective function

Regarding the assumptions made in section 3.1, the only remaining degree of freedom is the evaporation pressure. Pressure levels being very different from one fluid to the other, it is more relevant to use evaporation temperature as the optimization parameter.

In waste heat recovery applications, the objective function is not the efficiency of the Rankine cycle but the global efficiency of the system. This global efficiency combined the efficiency of thermal power recovery and the efficiency of the Rankine cycle:

$$\eta_{global} = \frac{\dot{W}_{\mathrm{net,ORC}}}{\dot{Q}_{\mathrm{available}}} = \varepsilon_{\mathrm{rec}} \cdot \eta_{ORC} \tag{1}$$

Where $\varepsilon_{\mathrm{rec}}$ is the efficiency of heat recovering in the evaporator defined as:

$$\varepsilon_{\mathrm{rec}} = \frac{\dot{Q}_{\mathrm{recovered}}}{\dot{Q}_{\mathrm{available}}} \tag{2}$$

And η_{ORC} is the organic Rankine cycle efficiency:

$$\eta_{ORC} = \frac{\dot{W}_{net,ORC}}{\dot{Q}_{recovered}} \tag{3}$$

$\dot{Q}_{available}$ is the total amount of thermal power that would be recovered if heat source was cooled down to ambient temperature.

The working conditions that maximize the global efficiency differ of the ones that maximize organic Rankine efficiency. Brasz (2008) illustrated this by an example with a waste heat source (see Figure 2). In the first case (see Figure 2 left), heat source enters the system at 105°C and leaves it at 95°C. The heat power transmitted to the Rankine cycle is thus relatively low but a cycle efficiency of 10.1% is achieved. In the second case (Figure 2 right), heat source enters the system at 105°C and leaves it at 60°C. The heat power transmitted is therefore 4.5 times higher than in the first case while cycle efficiency only falls to 7.1%. The global efficiency in the second case remains thus more than 3 times higher than is the first case.

Fluids selected for the comparison are non flammable fluids which show acceptable environmental properties (null ODP and as low as possible GWP).

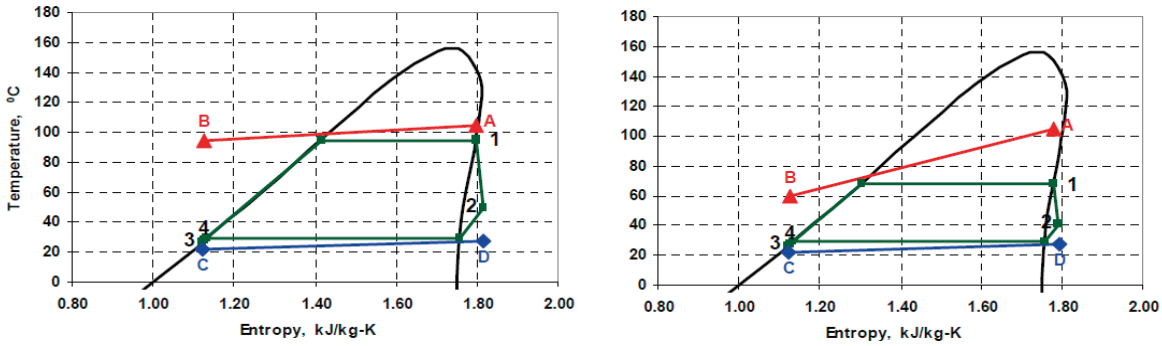

Figure 2: global efficiency

3.3 Simulation results

An optimization is performed for each fluid to find the evaporation temperature that maximizes the global efficiency of the system. Table 1 summarizes the value of key variables for the five fluids considered at optimum evaporation temperature. The required expander swept volume is also indicated in table 1 since it is a key parameter of the cycle (cfr section 4.1).

Table 1 : evaporation temperature optimization results

	HFE7000	**R245fa**	**Novec649**	**R123**	**R134a**
ε_{rec} [%]	86.04	79.65	90.47	72.72	91.43
η_{ORC} [%]	7.76	8.68	6.65	9.32	7.62
η_{global} [%]	6.68	6.91	6.02	6.77	6.97
Evaporation T° [°C]	89.6	92.8	88.1	95	100
Evaporation P [bar]	5.2	10.7	3.25	6.8	37
Condensing T° [°C]	32.3	32.1	32.8	31.4	31.6
Condensing P [bar]	0.9	1.9	0.55	1.15	7.8
Expander swept volume [cm³]	50	26	74	41	10

R134a is obviously the best fluid. Indeed, it shows the highest global efficiency and the smallest expander size. Unfortunately, pressure levels of R134a are not compatible with oil free scroll expander. The global efficiency of Novec649 is the lowest one and this fluid requires a very large expansion machine.

R123, R245fa and HFE7000 show very similar global efficiency. However, R245fa has the advantages to require a smaller expander. It should be noted that R123 has already been investigated experimentally by the authors in a previous work (Quoilin *et al.,* 2010)

These considerations lead to select R245fa and HFE7000 for the aim of experimental comparison.

4. EXPERIMENTAL RESULTS ANALYSIS

A total of 57 tests were performed between May 2009 and April 2010 with both selected fluids. For HFE7000, expander rotational speed, heat source temperature and heat source flow rate were modified. For R245fa, other cycle parameters were also adjusted, such as the overheating at the expander inlet and the subcooling at condenser exhaust. For HFE7000, these two parameters were kept constant. This explains why test results with R245fa are much more scattered than the ones with HFE7000 in the next figures.

4.1 Expander inlet volumetric flow rate

According to Tchanche *et al.* (2010), cost of the expander can represent more than 40% of total installed cost of a small scale organic Rankine cycle. In this previous study, authors assumed a linear increase of expander cost with its swept volume:

$$C_{exp} = 450 + 340\dot{V}_{exp} \tag{4}$$

The cost of the whole system can thus be significantly reduced if the fluid selected requires a smaller turbine. Theoretically, it is the case for fluids which have a high heat of vaporisation (Δh_{vap}) and a high density in vapour state (ρ_{vap}). These properties are displayed in Table 2 for both fluid tested. R245fa having the higher latent heat of vaporisation and the higher density of vapour, it theoretically requires the smaller expander.

Table 2 : heat of vaporisation and vapour density of R245fa and HFE7000 for several evaporation temperatures

	R245fa		**HFE7000**	
	Δh_{vap} (kJ/kg)	ρ_{vap} (kg/m³)	Δh_{vap} (kJ/kg)	ρ_{vap} (kg/m³)
80 °C	152.5	44.12	116.1	31.59
100 °C	134.4	73.15	105.9	53.03
120 °C	111.7	119.7	92.8	87.47

This is confirmed by experimental results as displayed in Figure 3. For a given evaporating temperature, volume at expander inlet per kJ of heat recovered is always lower with R245fa than with HFE7000.

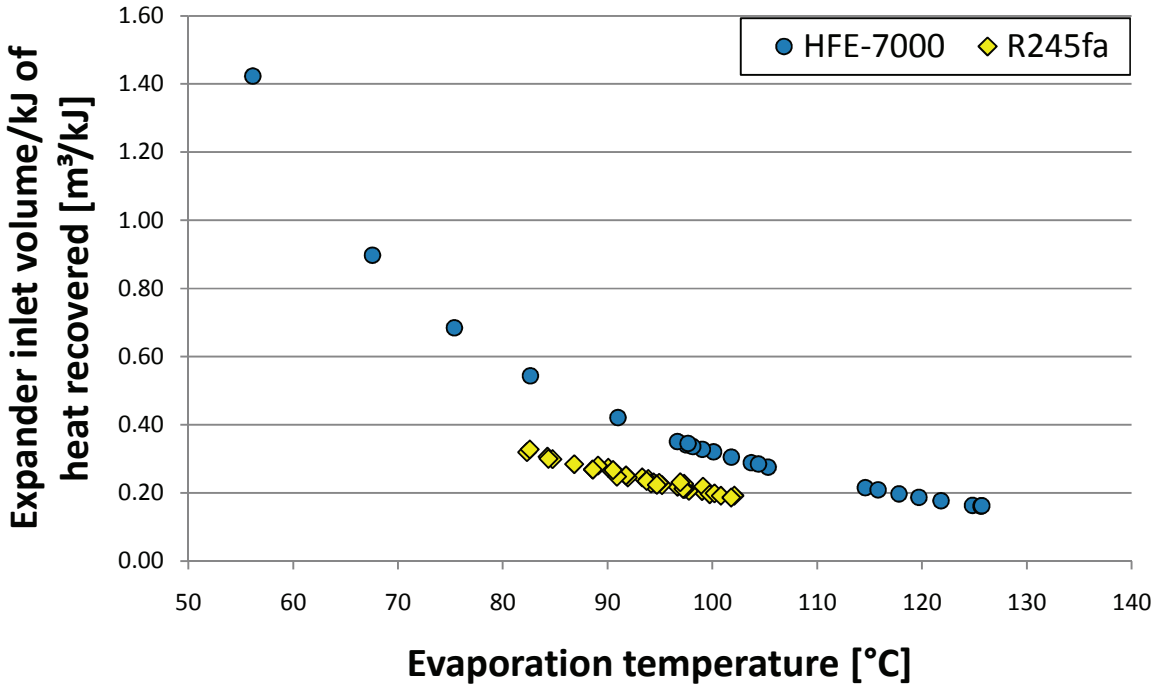

Figure 3 : expander inlet volume per kJ of heat recovered

4.2 Heat recovery efficiency, Rankine cycle efficiency and global efficiency

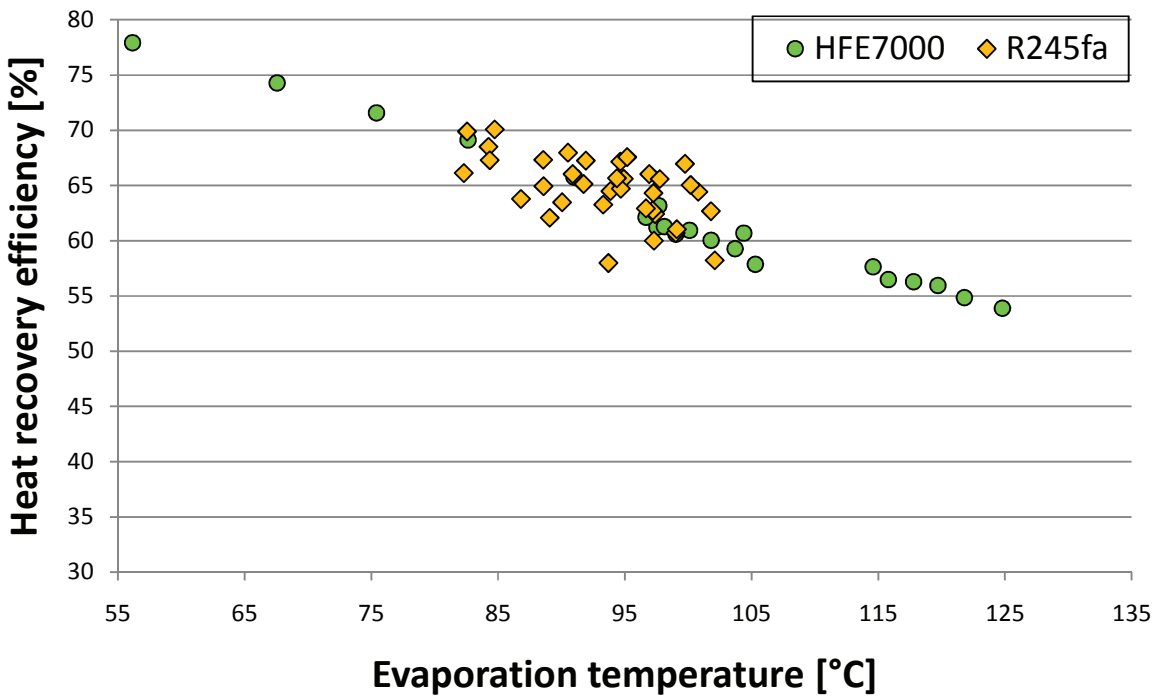

Figure 4 : heat recovery efficiency vs evaporation temperature

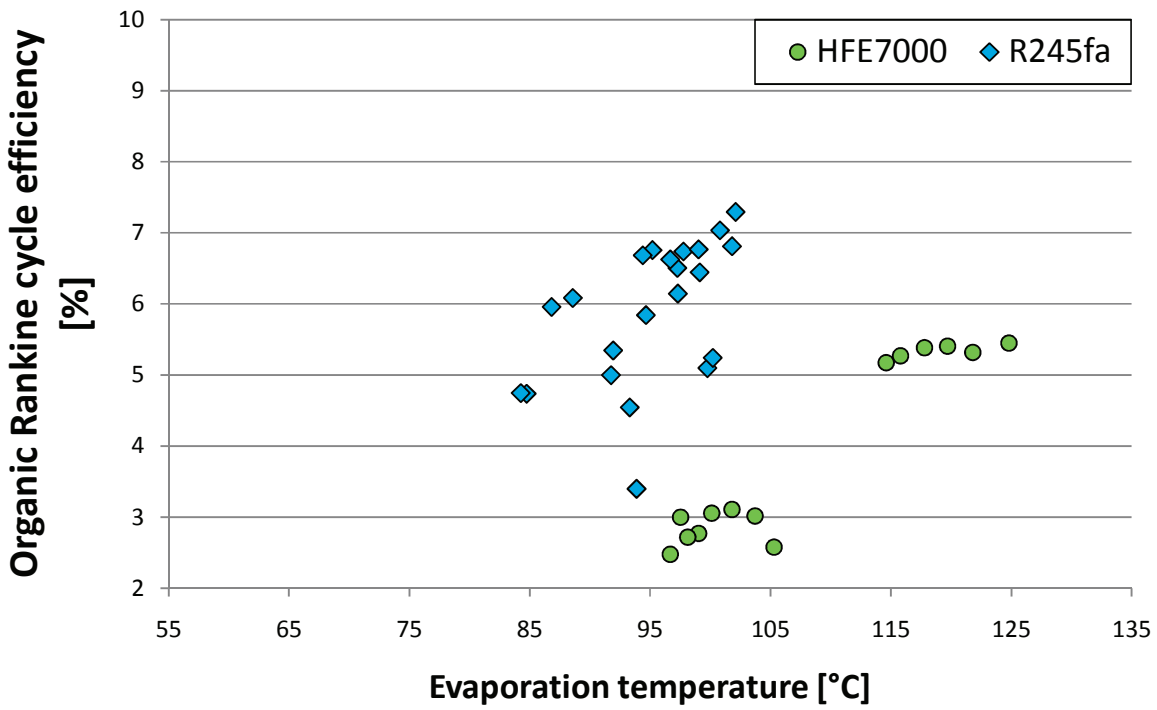

Figure 5 : Rankine cycle efficiency vs evaporation temperature

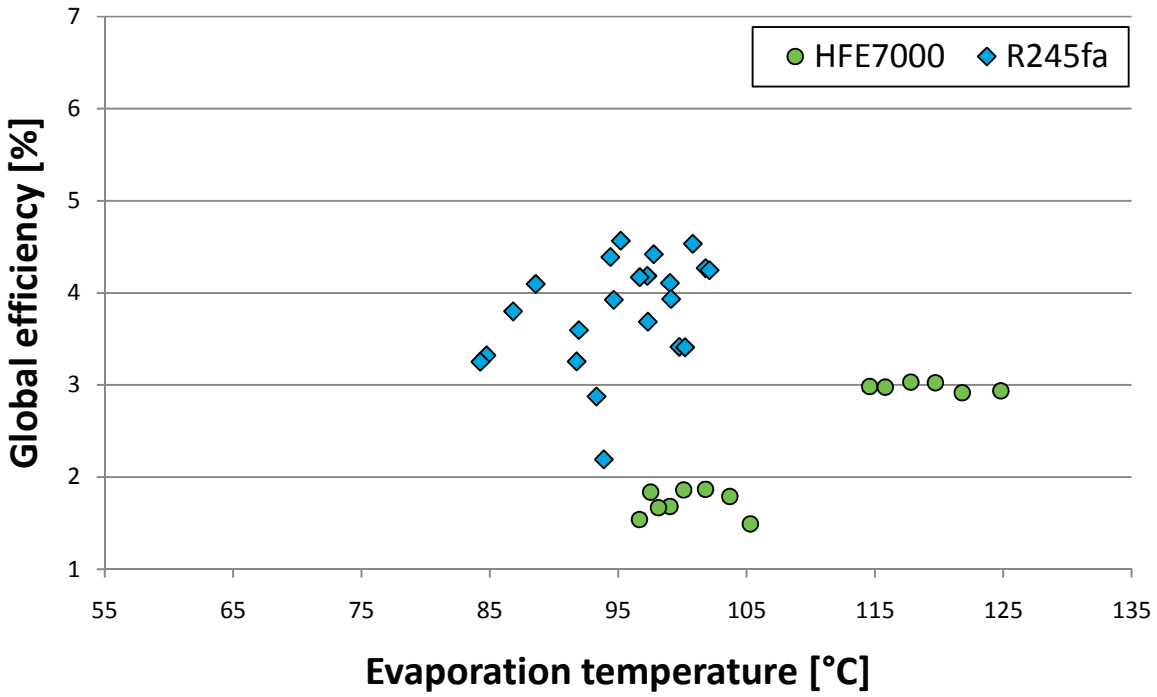

Figure 6 : global efficiency vs evaporation temperature

Figure 4 shows the evolution of the heat recovery efficiency as a function of evaporation temperature. The evolution is similar for both fluids: the efficiency of heat recovery decreases when evaporation temperature increases. However, there are differences between experimental results and simulation results stated in section 3.3. Indeed, for an evaporation temperature around 90°C, simulation predicted an efficiency of heat recovery of 86% for HFE7000 and 79.5% for R245fa (see Table 1). Measured values are respectively 66% for HFE7000 and 68% for R245fa. This difference is explained by the fact that, during test, the pinch points in the evaporators ranged from 10K to 25K while it was set 5K during simulations.

Figure 5 shows the evolution of the Rankine cycle efficiency as a function of evaporation temperature. For both fluids, Rankine cycle efficiency increases when evaporation temperature increases. However measured values are lower than the ones obtained during fluid selection simulations (see Table 1). This can be explained by the very low measured pump isentropic efficiency (10 to 20% depending of the flow rate) compared to the one set for simulations (60%).

In the global efficiency (see Figure 6), both negative effects are combined (high heat exchanger pinch point and low pump efficiency). Measured values of global efficiency are thus much lower than the ones predicted during fluid selection simulations. The maximum global efficiency was 4.6% with R245fa and only 3% with HFE7000.

5. CONCLUSION

Despite of a very similar efficiency of heat recovering, R245fa shows much higher global efficiency than HFE7000 for this heat source temperature range. This global efficiency could be significantly improved by selecting a pump with a higher efficiency and/or by increasing evaporator's performance. Moreover, R245fa is also the fluid that requires the smaller expansion machine.

NOMENCLATURE

The nomenclature should be located at the end of the text using the following format:

			Subscripts	
η	efficiency	(-)		
ε	efficiency	(-)	exp	expander
C	cost	(€)	rec	recovery
$\dot{Q}$	thermal power	(W)		
$\dot{V}$	volumetric flow rate	(m^3/s)		
$\dot{W}$	mechanical power	(W)		

REFERENCES

Badr, O., S.D., Probert, P.W., O'Callaghan, 1985, Selecting a working fluid for a Rankine cycle engine, *Applied Energy* 2: p. 1–42.

Brasz, J.J., 2008, Assessment of C6F as working fluid for organic Rankine cycle applications, In: Proceedings of the Twelfth International Refrigeration Engineering Conference at Purdue, paper n° 2342.

Lemort, V., S., Quoilin, C., Cuevas, J., Lebrun, 2009, Testing and modeling a scroll expander integrated into an Organic Rankine Cycle, *Applied Thermal Engineering*, Vol. 29, Issues 14-15: p. 3094-3102

Quoilin, S., V., Lemort, and J., Lebrun, 2010, Experimental study and modeling of an Organic Rankine Cycle using scroll expander, *Applied Energy* , Vol. 87, Issue 4: p. 1260-1268

Saleh, B., G., Koglbauer, M., Wendland, J., Fischer, 2007, Working fluids for low temperature organic Rankine cycles, *Energy* 32: p. 1210–1221.

Tchanche, B.F., S., Quoilin, S., Declaye, G., Papadakis and V., Lemort, 2010, Economic Optimization of Small Scale Organic Rankine Cycles, In: Proceedings of the 23rd International Conference on Efficiency, Cost, Optimization, Simulation and Environmental Impact of Energy Systems, Lausanne.