Purdue University
Purdue e-Pubs

International Compressor Engineering Conference | School of Mechanical Engineering

1996

The Development of the Simply Supported Feather Spring Valve

X. Qian
Northern Jiaotong University

Follow this and additional works at: http://docs.lib.purdue.edu/icec

Qian, X., "The Development of the Simply Supported Feather Spring Valve" (1996). *International Compressor Engineering Conference.* Paper 1137.
http://docs.lib.purdue.edu/icec/1137

This document has been made available through Purdue e-Pubs, a service of the Purdue University Libraries. Please contact epubs@purdue.edu for additional information.
Complete proceedings may be acquired in print and on CD-ROM directly from the Ray W. Herrick Laboratories at https://engineering.purdue.edu/Herrick/Events/orderlit.html

THE DEVELOPMENT OF THE SIMPLY SUPPORTED FEATHER SPRING VALVE

Qian Xinghua, Professor
Mechanical Engineering Dept.
Northern Jiaotong University, Beijing, P. R. China

ABSTRACT

This paper introduces the simply supported feather spring valve without the valve guard which is developed by the writer. The concepts of the linear air lift and the linear moment of inertia which are used for the calculation of the spring valve are brought up. The formulas calculating the linear air lift, the effective flow area and the thickness of the spring are worked out, and the calibrating principles of the intensity, bending, Euler load, frequency of the spring are proposed.

Keywords: compressor, valve

INTRODUCTION

The simply supported feather spring valve in this paper changes the traditional structure of a valve, that is it hasn't the valve guard. The new valve has several characteristics: the little clearance volume, little resistance, low noise, the strong adaptability under different working conditions, the simple producing method and the low cost.

THE INTRODUCTION OF THE STRUCTURE OF THE SIMPLY SUPPORTED FEATHER SPRING VALVE WITHOUT THE VALVE GUARD

Figure 1 is the structure of the simply supported feather spring valve. It consists of valve set 1, feather spring 2 and support 3. The support 3 consists of two short arc bottomed keyseats. The bottom surface ***a*** of the keyseat supports the feather spring, the side surface ***b*** limits the lateral motion of the spring. (See figure 2.) The keyseats can be slotted on the roof of the cylinder in air minicompressor, this leads to the combination of the support and the cylinder to a whole.(Figure 3). The span of the two keyseats equals to the length of the feather spring which is ***L***. The Width of the spring is ***B***. In the valve seat, there are several equal width valve channels ***C***, the length and width of the valve channels are ***l*** and ***b*** which are less than ***L*** and ***B***. The characteristic of the valve is that it has no valve guard, the support simply supports the feather spring and does not have the function of the valve guard. While there is no air going through the valve, the spring presses close to the valve seat to block up the valve channel, and while the valve is working, the spring is pushed by air and bent, the Valve channel is opened and the air goes into the cylinder through the valve. Because there is no valve guard to limit the spring lift ***h***, the feather spring lift is a variable.

THE DISTRIBUTION OF THE LINEAR AIR LIFT

When the simply supported valve is working, the feather spring will be bent at the effect of the air lift. The bending depends on the distribution and the value of the air lift. Because the distribution load was used to study the deformation of plate, to correspond to the up mentioned statement, the concepts of the linear air lift q and the linear moment of inertia J is brought up. The air lift per unit length of the feather spring (the width of the spring is 1 unit) is called linear air lift (unit is N/M). The moment of inertia of 1 unit width feather spring is called linear moment of inertia (unit is m^3).

The spring is affected only by the air lift F. The air lift pressed on the line of ΔL long at X point is (see figure 4) $F(x) = \beta \cdot B \cdot \Delta L \cdot \Delta P(x)$

β— air lift coefficient, B — the width of the feather spring, $\Delta P(x)$ — the dynamic pressure on the face surface of the feather spring.

The linear air lift at X point of the spring is $q(x) = F(x)/B\Delta L = \beta \Delta P(x)$

Let $B = 1$ we can get $q(x) = \beta \Delta P(x)$ (1)

If the mean dynamic pressure on the face surface of the feather spring is Δp, the mean linear air lift will be $q = \beta \Delta p$ (2)

If Eq.(1) is divided by Eq.(2), We can get: $\dfrac{q(x)}{q} = \dfrac{\Delta p(x)}{\Delta p}$

Let $\overline{Q} = q(x)/q$ (3)

$\overline{P} = \Delta p(x)/\Delta p$ (4)

$\overline{Q}$ — relative linear air lift, $\overline{P}$ — the relative dynamic pressure on the face surface.

Substituting Eq.(3) and Eq.(4) into Eq.(2), we will get: $\overline{Q}(x) = \overline{P}(x)$ (5)

From Eq.(5) we can see that the distribution law of the spring's relative linear air lift $\overline{Q}(x)$ is the same as the relative dynamic pressure $\overline{P}(x)$ on the face surface of the spring. $\overline{Q}$ and $\overline{P}$ equal at the same point on the spring.

Figure(5) is the $\overline{P}$—$\overline{X}$, $\overline{P}$—$\overline{Z}$ curve of the cantilevered feather spring.[1] In figure **a**, the abscissa is $\overline{X} = x/L$, in figure **b** the abscissa is $\overline{Z} = z/B$, the ordinates of the two figures are $\overline{P}$.

Curve 1 correspond to the round valve port and curve 2 and curve 3 correspond to the two galley valve ports. The relative length l/L of the three ports respectively equal to 0.16, 0.47, 0.77. Because l/L of this simply supported valve is about 1, from curve 3 we can conclude that on the whole feather spring, $\overline{Q}$ is well-distributed, the linear air lift q of the new valve is also well-distributed (see figure 6), and Eq.(2) should be used while calculating q. If the relative pressure loss δ and the working pressure p is known, q can also be expressed as $q = \beta \delta p$ (6)

THE CALCULATION OF THE FEATHER SPRING LIFT AND THE EFFECTIVE FLOW AREA

The lift and the effective flow area depend on the spring bending function $y = y(x, \theta)$.

1. Feather Spring Lift h

The feather spring lift h is the maximum departure from the valve seat when the spring is at the maximum bending.(Figure 6) $h = \Delta h + y_{max}$, $\Delta h = L(\alpha - \sin\theta)/2$

Δh— the vertical distance while the spring gliding down. y_{max} — the maximum bending.

Because y_{max}/L and angle α of the feather spring is little, Δh is ignored, to simplify the problem,presuming that $h = y_{max}$.

Under the effect of the well-distributed linear air lift q, the equation of the bending of the simply supported feather spring is

$$y = \frac{q}{24EJ}(L^3x - 2Lx^3 + x^4) \tag{7}$$

E — modules of elasticity, J — linear moment of inertia. If the thickness of the spring is a (unit is **m**) then

$$J = a^3/12 \tag{8}$$

Substituting $x = L/2$ into Eq.(7), that comes to the feather spring lift formula $h = \dfrac{5qL^4}{32Ea^3}$ (9)

2. The Effective Flow Area A_V

The effective flow area A_V is composed of two bow shaped areas after the deformation of the feather spring. If the number of working feather spring is i and their length are L_1, L_2, ····· L_i respectively, then

$$A_V = 2\sum_{n=1}^{n=i}\int_0^{L_i} y(x)dx = 4\sum_{n=1}^{n=i}\int_0^{L_i/2}\frac{q}{24EJ}(L_i^3x - 2L_ix^3 + x^4)dx = \frac{q}{5Ea^3}\sum_{n=1}^{n=i}L_i^5 \tag{10}$$

If all the feather springs as long as L, then $A_V = \dfrac{iqL^5}{5Ea^3}$ (11)

From Eq.(9), Eq.(10), Eq.(11), we can see that h and A_V will change in different working conditions. They will adjust themselves with the changes of the working conditions.

THE CALCULATION OF THE LINEAR AIR LIFT

The linear air lift q depends on Δp. According to literature

$$\Delta p = \frac{\rho}{8}\left[\frac{\pi C_m A_p}{\alpha A_V}(\sin\theta + \frac{\lambda}{2}\sin 2\theta)\right]^2 \tag{12}$$

$$\rho = p/RT$$

ρ — gas density, p — gas pressure, T — gas temperature, α — flow coefficient of valve, C_m — piston mean velocity, A_p — piston area, λ — crank radius divided by length of connecting rod.

Substituting Eq.(12) into Eq.(2) and considering the relationship of Eq.(11) and (10), we can work out q:

$$q = a^2\{\frac{\beta p}{RT}[\frac{5\pi EC_m A_p}{64\alpha\sum L_i^5}(\sin\theta + \frac{\lambda}{2}\sin 2\theta)]^2\}^{\frac{1}{3}} \qquad (13)$$

If the effect of λ is ignored (when λ=0.2, the error is less than 4%), the maximum linear air lift q_{max} takes place at the position where the angle of the crank is $\theta = 90^0$ or $\theta = 270^0$.

$$q_{max} = a^2[\frac{\beta p}{RT}(\frac{5\pi EC_m A_p}{64\alpha\sum L_i^5})^2]^{\frac{1}{3}} \qquad (14)$$

THE CALCULATION OF THE SPRING RATE AND THE THICKNESS OF THE FEATHER SPRING

Substitute Eq.(6) into Eq.(14), the thickness a of the spring can be worked out according to the valve parameter δ which has been given.

$$a = \delta^{\frac{1}{2}}(\frac{64\alpha\beta P\sum L_i^5}{5\pi EC_m A_p})^{\frac{1}{3}}(RT)^{\frac{1}{6}} \qquad (15)$$

The definition of the spring rate C of the feather spring is $C = q\,B\,L/h$ and substituting Eq.(9) into it, we can get the formula of the spring rate $C = 32BEa^3/5L^3$ (16)

THE CALCULATION OF THE PREBENDING OF LARGE SPAN FEATHER SPRING

The feather spring will hang down a little by the effect of its gravity and create a bending Δh, so it will not press close to the valve seat, this leads to the loss of the actual suction capacity, this is because in the beginning compression stroke, some of the air in the cylinder will flow back to the suction cavity through the gap formed by the bending Δh. Because the bending Δh of the large feather spring is large and can not be ignored, to cancel out it, an opposite pre-bending Δh must be applied on the spring. Suppose the density of the feather spring is ρ_S, the pre-elasticity ΔhC should be equal to the spring's gravity $aBL\rho_S$. That is $\Delta hC = aBL\rho_S$

Substitute Eq.(16) into it then comes to the formula of pre-bending: $\Delta h = \frac{5\rho_S L^4}{32Ea^3}$ (17)

THE DESIGN OF THE ARC BOTTOM OF THE KEYSEAT

The bottom surface of the keyseat of the simply supported feather valve should meet the following requirements:

1) It can support the free state feather spring to press close to the valve seat.

2) It should ensure the touch at the both ends of the spring.

3) The higher edge of the bottom should make the spring glide down a little under the effect of q, and it should ensure the axial force not beyond the Euler Load under the effect of q_{max}. The lower edge of the bottom should ensure the spring not gliding off from the keyseats and falling down into the cylinder under the effect of q_{max}.

CALIBRATING PRINCIPLES OF THE FEATHER SPRING

1. The Calibrating Principles of Bending

Because Eq.(7) can be used at the condition of $y_{max}/L < 0.1$, we can get the formula of bending calibration:

$$\frac{h}{L} = \frac{5qL^3}{32Ea^3} < 0.1 \tag{18}$$

2. Intensity Calibration

The maximum stress σ_{max} of the feather spring is $\sigma_{max} = \frac{M_{max}}{W} = \frac{BL^2 q_{max}/4}{a^2 B/6} = \frac{3L^2 q_{max}}{2a^2}$ (19)

If the allowable stress is $[\sigma]$, the intensity calibration formula is $\frac{3L^2 q_{max}}{2a^2} \le [\sigma]$ (20)

3. Euler Calibration

Under the effect of q_{max}, the axial force pressed on the both ends of the feather spring by the support should not beyond the Euler Load, so the axial force pressed on the spring by the arc surface should be smaller than Euler Load $\pi^2 EJ/L^2$. The maximum axial force which is created at the highest position A of the arc surface is $BLq_{max}\, tg\gamma/2$ (γ is the central angle of the arc AC, see figure 8), it should satisfy the formula:

$$\gamma < tg^{-1}\left(\frac{2\pi^2 EJ}{BL^3 q_{max}}\right) \tag{21}$$

4. The Natural Vibration Frequency Calibration

The formula of the natural vibration frequency is $\frac{f}{f_0} = \frac{KnL^2}{30\pi}\sqrt{\frac{\rho_S Ba}{EJ}} \neq 0.75 \sim 1.25$ (22)

REFERENCES

1. Lezhi Yang, Zhe Li, " An Experiment Study On Thrust Distribution of Reed Valve Plate In Reciprocating Compressor "ICECESE, Whuhan, 1990, P765

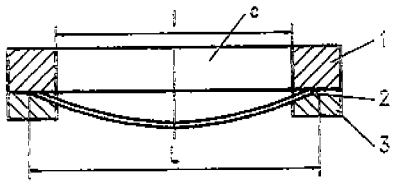

Fig.1 The indicator diagram of the simply supported feather spring valve

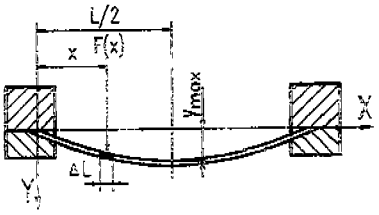

Fig.4 The air lift on the feather spring

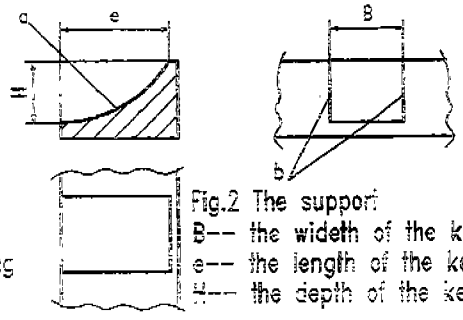

Fig.2 The support
B-- the wideth of the keyseat
e-- the length of the keyseat
H-- the depth of the keyseat

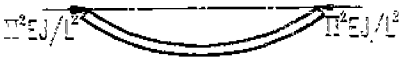

Fig.9 The axial force equals to The Euler Load

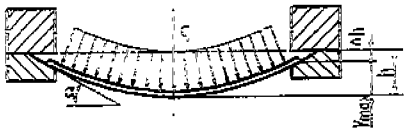

Fig.6 The distribution of the linear air lift q and the spring lift h
h-- the vertical distance while the spring gliding down
y-- the maximum bending
α-- the slope of the elastic curve

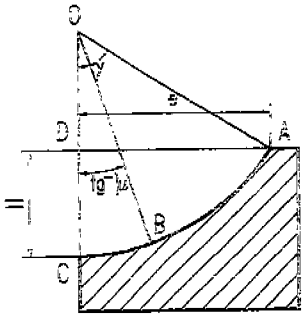

Fig.8 Determine the arc surface ABC

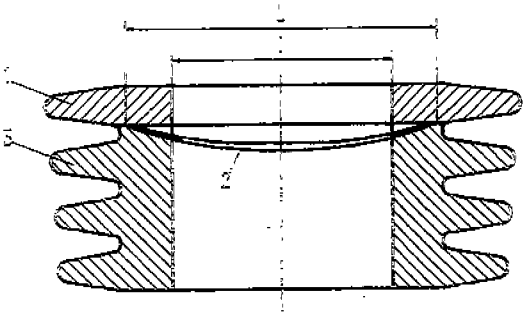

Fig. 3 The indicator diagram of the simply supported feather spring valve of minicompressor

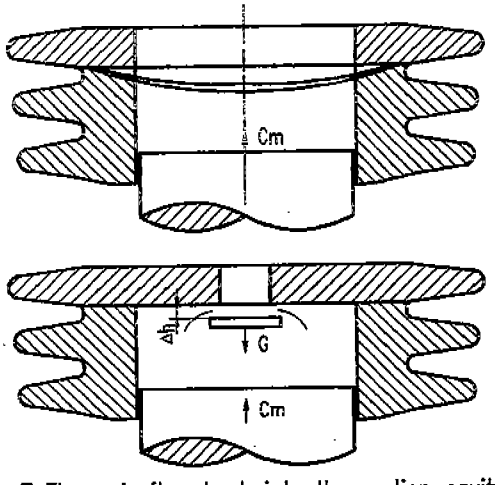

Fig. 7 The air flow back into the suction cavity under effect of the bending h which is created by the gravity of the simply supported feather spring

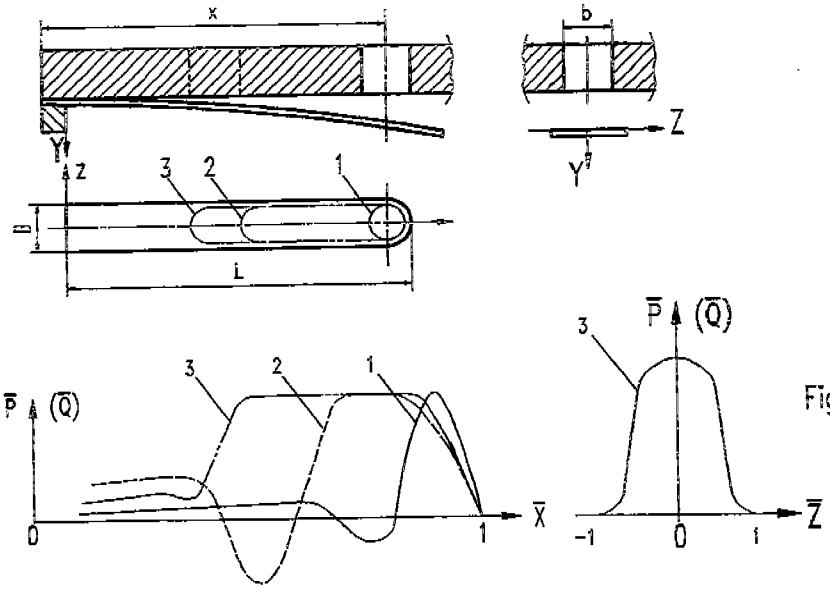

Fig.5 The distribution of the relative dynamic pressure of the cantilever feather spring
P̄-- relative dynamic pressure
Q̄-- relative linear air lift
X̄-- the relative position of the valve port on X orientation
Z̄-- the relative position of the valve port on Z orientation
X̄ = x/L Z̄ = z/b