Purdue University
Purdue e-Pubs

International Refrigeration and Air Conditioning Conference

School of Mechanical Engineering

2010

Experimental Study on Heat Transfer Enhancement of Water-water Shell-and-Tube Heat Exchanger Assisted by Power Ultrasonic

Ye Yao
Institute of Refrigeration and Cryogenics

Xingyu Zhang
Institute of Refrigeration and Cryogenics

Yiying Guo
Institute of Refrigeration and Cryogenics

Follow this and additional works at: http://docs.lib.purdue.edu/iracc

Yao, Ye; Zhang, Xingyu; and Guo, Yiying, "Experimental Study on Heat Transfer Enhancement of Water-water Shell-and-Tube Heat Exchanger Assisted by Power Ultrasonic" (2010). *International Refrigeration and Air Conditioning Conference.* Paper 1110.
http://docs.lib.purdue.edu/iracc/1110

This document has been made available through Purdue e-Pubs, a service of the Purdue University Libraries. Please contact epubs@purdue.edu for additional information.
Complete proceedings may be acquired in print and on CD-ROM directly from the Ray W. Herrick Laboratories at https://engineering.purdue.edu/Herrick/Events/orderlit.html

Experimental Study on Heat Transfer Enhancement of Water-water Shell-and-Tube Heat Exchanger Assisted by Power Ultrasonic

Ye Yao,[1,2]*, Xingyu Zhang[1] ,Yiying Guo[1]
1. Institute of Refrigeration and Cryogenics, Shanghai Jiao Tong University, Shanghai, 200240, China (Tel: 765-412-9774; E-mail: yao11@purdue.edu)

2. National Air Transportation Center of Excellence for Research in the Intermodal Transport Environment (RITE), School of Mechanical Engineering, Purdue University, West Lafayette, IN, 47907-2031, USA (Tel: 86-21-13641943577; E-mail: yeyao10000@sjtu.edu.cn)

* Corresponding Author: Ye Yao

ABSTRACT

High-intensity ultrasound can induce cavitation bubbles and acoustic streaming in liquid, which makes it possible for power ultrasonic to be applied to the improvement of heat transfer process. In the present work, the experimental study was made on the heat transfer enhancement of water-water heat exchanger in shell-and-tube type assisted by power ultrasonic. The design of the experimental system is presented in detail, and the experimental procedures is expounded as well to make the study process more clearly. The acoustic frequency of ultrasound transducer employed is about 21 kHz, and three power levels (40W, 60W and 100W) are used for this study. The impact of water flow rate and inlet water temperature in the tube as well as the ultrasonic power on the enhancement were investigated. It was found that the water flow rate and ultrasonic power levels would produce great influence on the enhancement by power ultrasound which decreased with the increasing water velocity in the tube and the decreasing acoustic power. However, the experimental results were not as favorable as expected. Some problems are addressed for the future study.
Keywords: shell and tube heat-exchanger, heat transfer enhancement, power ultrasonic

1. INTRODUCTION

Heat exchanger is one of the most important devices widely used in many industrial occasions like petrochemical processes and cooling/heating systems. For decades, efforts have been made to enhance heat transfer of heat exchangers, reduce the heat transfer time and finally improve energy utilization efficiency. These efforts commonly include passive and active methods such as creating turbulence, increasing area and using nanofluid (Srisawad and Wongwises, 2009; Bhowmik and Lee, 2009; Farajollahi et al., 2010). Ultrasound (usually above 16 kHz in frequency (http://en.wikipedia.org/wiki/Ultrasound) can induce some special mechanical effects when it transmits through medium, typically like cavitation in liquid environment and acoustic streaming in liquid or gas environment. Cavitation refers to the formation and subsequent dynamic behavior of vapor bubbles in liquids. It occurs when the acoustic intensity is high enough and the sound waves are coupled to the liquid surface, which results in the propagation of alternating regions of compression and expansion, and thus in the formation of micro-size vapor bubbles (Suslick, 1998). Acoustic streaming is to show a tendency for a steady circulation to occur near the surfaces of obstacles and vibrating elements, and near bounding walls in a high-intensity sound field (Lee and Wang, 1990). These effects make it possible for ultrasound to be applied to the heat transfer enhancement under different circumstances, such as natural convection heat transfer (Fand, 1965; Li and Parker, 1967; Wong and Chon, 1969; lida and Tsutsui, 1992) and pool boiling heat transfer (Wong and Chon, 1969; lida and Tsutsui, 1992; Park and Bergles, 2004; Bonekamp and Bier, 1997) Kim et al (2004) employed the flow visualization and thermal measurement to study the relationship between the flow behavior induced by ultrasonic vibration and the consequent heat transfer enhancement in natural convection and pool boiling regimes. The experimental results showed that behavior of cavitation bubbles strongly affected the degree of heat transfer enhancement in the natural convection and sub-cooled boiling regimes, while acoustic streaming was the major factor enhancing the heat transfer rate. Nomura et al. (2002) studied experimentally the influence of streaming induced by ultrasound vibration on heat transfer in liquid environment (water) using a horn-type ultrasonic vibrator with 60.7 kHz. Up to a tenfold

increase in heat transfer coefficient was achieved due to acoustic streaming and cavitation bubbles or micro-jets in both tap water and degassed water. Hyun et al.(2005) investigated the convective heat transfer enhancement by ultrasound under gaseous environment, which showed that the enhancement mainly owed to the acoustic streaming induced by ultrasound flexural vibrations that increased the turbulence intensity of air near the plate surface.

The objective of the present study is to investigate experimentally on the potential heat transfer enhancement of water-water shell-and-tube heat exchanger assisted by the high-intensity ultrasound.

2. EXPERIMENTAL SETUP AND METHODS

The schematic diagram and field photographs of the experimental system is presented in Fig.1 and Fig.2, respectively. As shown in Fig.1, the whole setup mainly comprises the hot water loop, the cool water loop, the heat exchanger, the ultrasonic transducer, the ultrasonic producer as well as the other instruments including the temperature sensors (type: copper-constantan thermocouple; precision: ±0.1^{o}C) and the water flow meter (type: LZB-25; relative error: 2.5%). The hot water loop includes the hot water tank, the hot water pump (type: 20GZ0.8-15; rated power: 370W; maximum water head: 6m) and the electric heater (maximum input power: 2 kHz) combined with a power regulator; the cool water loop includes the cooling tower (designed cooling capacity: 5 kW) and the cool water pump (type: 25DBZ-1.5; rated power: 1.5kW; maximum water head: 15m); the heat exchanger is made of a plexiglass pipe (diameter: 50mm; Length: 300mm) and a U-shaped brass pipe ($D10 \times 2$ mm in size, which is installed in the plexiglass pipe). The plexiglass pipe is connected with the cool water loop, and the U-shaped brass pipe with the hot water loop. The water flow rates flowing through the plexiglass pipe and the U-shaped brass pipe can be regulated through adjusting the water valves. The ultrasonic transducer can produce different power levels of ultrasound with 21kHz in frequency when it is driven by the ultrasound generator. In this work, three power levels, i.e. 40W, 60W and 100W, were used for the study. Keithley 2700 (a high-precision data acquisition system) was employed to automatically record the cool/hot water temperatures entering and leaving the shell-and-tube heat exchanger through the corresponding temperature sensors. The water flow meter was installed on the hot water loop to measure the hot water flow rate flowing through the brass pipe. To reduce the measurement error of the water flow rate, the observation data were made for every one minute during the experiment.

The basic experimental procedure is as follows:

(1) Filling the system with enough water;

(2) Keeping the water valves in full-open state, and running the cool water pump, the hot water pump and the electric heater in turn;

(3) Regulating the water flow rate in the hot water loop to a certain value through adjusting the water valve;

(4) Regulating the hot water temperature in the tank to a certain stable value through adjusting the power regulator that controls the input power of the heater.

(5) Recording the temperatures of the water entering and leaving the heat exchanger (the time interval of the data acquisition system is set as 1s), and meantime, observing the water flow rate in the hot water loop for every minute;

(6) Turning on the ultrasonic generator, and adjusting the power level of ultrasound that is produced by the ultrasound transducer; continuing on recording the variables included in step (5);

(7) After one experimental condition is completed, repeating steps (3)-(6) for the other conditions.

The amount of heat transfer (Q_o : W in unit) between the hot water flow (inside the U-shaped brass pipe) and the cool water flow (outside the U-shaped brass pipe) can be calculated by Eq.(1) according to the experimental data.

$$Q_o = c_w G_h (t_1 - t_2) \tag{1}$$

where, c_w is specific heat of water, *J/kg.^{o}C*; G_h is mass flow rate of hot water in the U-shaped brass pipe, *kg/s*; t_1, t_2 is inlet and outlet hot water temperature, respectively, ^oC .

The heat transfer coefficient (K : $W / m^2 \cdot {}^oC$) can be written as:

$$K = \frac{Q_o}{F \Delta t_m} = \frac{c_w G_h (t_1 - t_2)}{F \Delta t_m} \tag{2}$$

where, F is total area of the U-shaped brass pipe, m^2; Δt_m is the mean temperature difference between the hot

and the cool water flow, ^oC. Δt_m can be got by using Eq.(3):

$$\Delta t_m = \frac{(t_1 - t_1^{'}) - (t_2 - t_2^{'})}{\ln\left(\frac{t_1 - t_1^{'}}{t_2 - t_2^{'}}\right)} \tag{3}$$

where, $t_1^{'}, t_2^{'}$ is inlet and outlet cool water temperature, respectively, ^oC .

1 U-shaped Brass pipe (Inner diameter: 10 mm)
2 Plexiglass pipe (Inner diameter: 50 mm; Length: 300 mm)
3 Cool water pump (type:25DBZ-1.5 ; Rated power: 1.5 kW)
4 Hot water pump (type:20GZ0.8-15; Rated power: 375W)
5 Cooling tower (size: D300mm x 600mm)
6 Hot water tank (size: 500mm x 400mm x 300mm)
7 Electric heater (rated power 2 kW)
8 Power regulator
9 Ultrasonic transducer
10 Ultrasonic generator
11 Temperature sensor (copper-constantan thermocouple)
12 Water flow meter (type: LZB-25)
13 Three-way connector

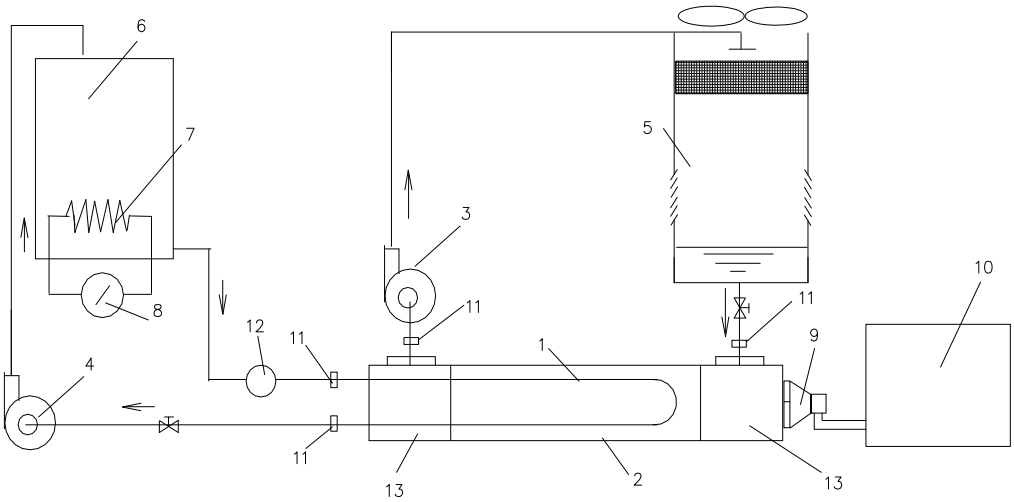

Figure 1 Schematic diagram for the experimental setup

The whole experimental system

Ultrasound generator

Heat exchanger

Ultrasonic transducer

Figure 2 Field photographs for the experimental system

The efficiency of heat transfer (ε) is another important index for evaluating the working efficiency of heat exchanger, which is defined as the ratio of the actual heat transfer rate to the maximum one. In this study, ε can be calculated by:

$$\varepsilon = \frac{t_1 - t_2}{t_1 - t_1'} \tag{4}$$

The enhancement ratio (*ER: %*) is used to evaluate the heat transfer enhancement assisted by the ultrasound.

$$ER = \frac{\varepsilon_U - \varepsilon_{UN}}{\varepsilon_{UN}} \times 100\% \tag{5}$$

where, the subscript 'U' and 'UN' represents, respectively, with ultrasound and without ultrasound.

3. RESULTS AND DISCUSSION

3.1 Influence of Water Flow Rate on Heat Transfer Enhancement

The heat transfer enhancement brought by the ultrasound may be influenced by the water flow rate passing through the heat exchanger. In this experimental study, the hot water flow rate inside the U-shaped pipe was changed to examine this impact. The results are shown in Fig.3. It is clear that the heat transfer has an obvious increase after 100-W ultrasound is emitted into the heat exchanger. The enhancement should owe to the ultrasonic vibration by transmitting acoustic waves in the liquid, which is manifested by cavitation bubbles and acoustic streaming (Kim et al., 2004; Hyun et al., 2005). The results also show that the enhanced ratio of heat transfer due to the ultrasound decreases with the increasing velocity of hot water (inside the U-shaped pipe). The enhanced ratio for the heat transfer efficiency is about 17% as the hot water velocity (inside the U-shaped pipe) is 1.8 m/s, while it drops to about 8% when the hot water velocity increases to 4.2 m/s. It indicates that the effect of ultrasound on the heat transfer will depend, to a large degree, on the flow condition. Different flow behavior leads to different degree of heat transfer enhancement. The cavitation bubbles and acoustic streaming induced by the ultrasound in liquid will increase the turbulence degree of movement of fluid, which is equivalent to increasing the fluid velocity. Therefore, it is reasonable to suppose that the effect of ultrasound on the heat transfer would increase with the decreasing flow rate.

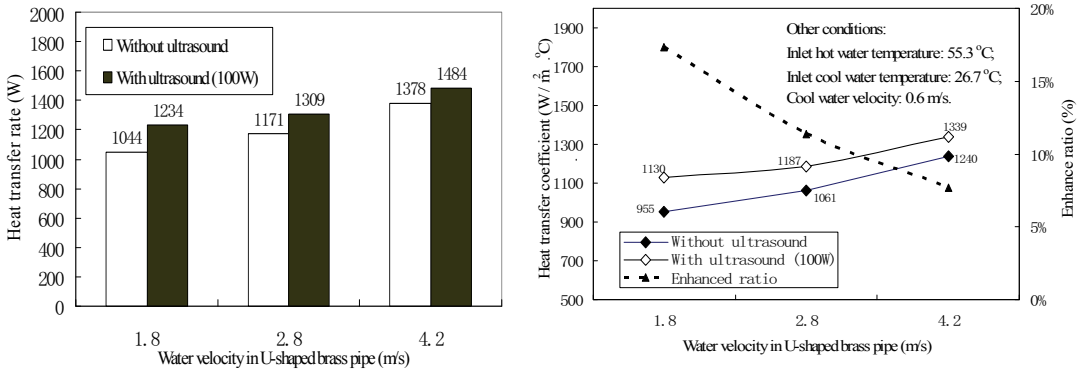

Figure 3 Effect of ultrasound on heat transfer under different water flow rates

3.2 Influence of Inlet Hot Water Temperature on Heat Transfer Enhancement

Although the water temperature produces little effect on the heat transfer coefficient, it may influence the efficiency of heat transfer. It is found in Fig.4 that the enhanced ratio for the heat transfer efficiency due to the ultrasound changes with the inlet temperature of hot water. The peak point of enhanced ratio occurs at about 55 ℃. The phenomenon may be explained by the relationship between the acoustic cavitation and the liquid temperature. As mentioned above, cavitation induced by the ultrasound is the main force that intensifies the turbulence of fluid. So, maximizing cavitation of the liquid is obviously very important for ultrasound to enhance the heat transfer process. Temperature may be the most important parameter to be considered in maximizing cavitation intensity. This is because many liquid properties affecting cavitation intensity are related to temperature, such as the viscosity, the solubility of gas in the liquid, and the vapor pressure (Fuchs, 2002).

Increasing liquid temperature, on one hand, will decrease viscosity of liquid and make it easier to form cavitation bubbles, on the other hand, will be adverse to the formation of acoustic cavitation because of the reduction of dissolved gas in the liquid and the rising of vapor pressure required. Therefore, there should exist one favorable liquid temperature that maximizes the acoustic cavitation intensity in liquid to achieve the biggest enhancement of heat transfer. It should be noted that 55℃ obtained in this study may be only an approximately favorable temperature in this case study. Further study ought to be made on this issue, and a reasonable model be established for the guidance of this application of ultrasound.

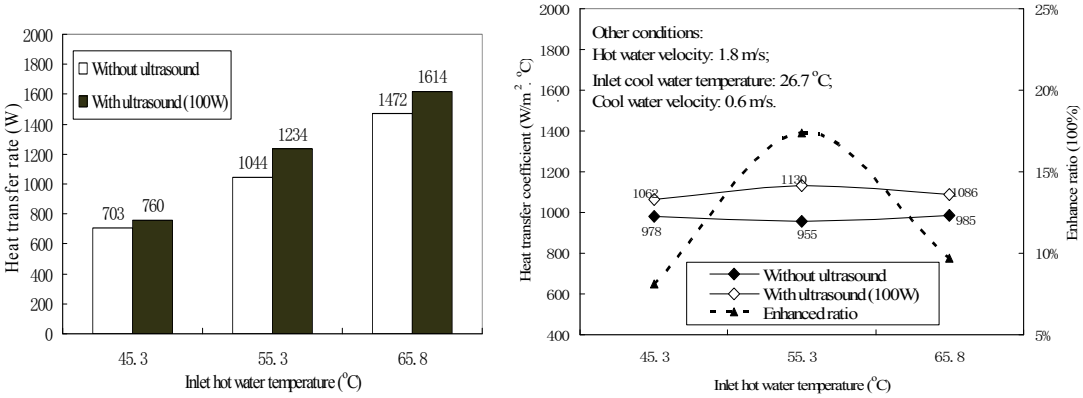

Figure 4 Effect of ultrasound on heat transfer under different hot water inlet temperatures

3. 3 Influence of Ultrasound Power Level on Heat Transfer Enhancement

Cavitation intensity is directly related to ultrasonic power levels. As indicated in Fig.5, there should be a power threshold above which the ultrasonic cavitation can do work in the enhancement of heat transfer. Taking this experimental study for example, the power level of 40W brings about little effect on the heat transfer enhancement (only 3% in the enhanced ratio). When the ultrasound power level rises to 60W and 100W, the enhanced ratio arrives at about 13% and 17%, respectively. It is supposed that the enhanced ratio would further increase if the higher ultrasound power level was applied. However, as inferred from the trend curve of the enhanced ratio versus the ultrasound power level in Fig.5, the increase of enhanced ratio will become smaller with the increase of ultrasound power level. From the perspective of energy utilization efficiency, the power level of ultrasound applied for the heat transfer enhancement should have a favorable value.

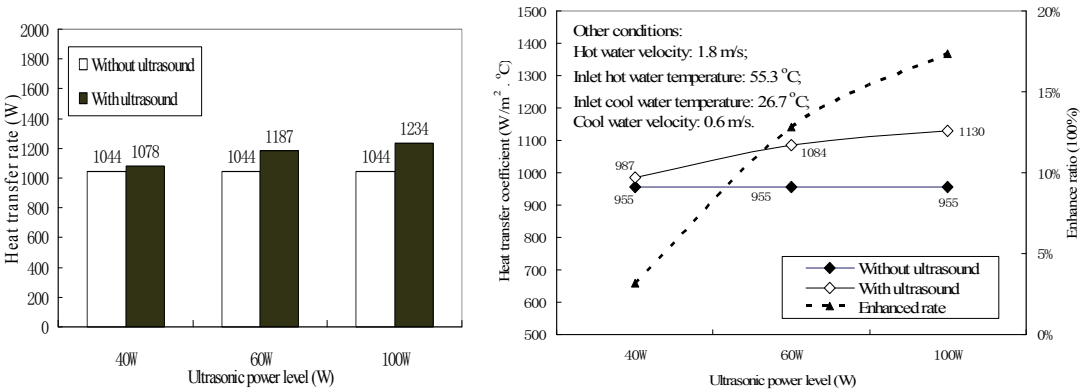

Figure 5 Effect of ultrasound power level on heat transfer enhancement

4. CONCLUSIONS

This study mainly presents some experimental results of heat transfer enhancement of shell-and-tube heat exchanger assisted by ultrasound (21 kHz in frequency). The enhancement may be influenced by some conditions like the fluid temperature, the fluid velocity as well as the power level of ultrasund applied. The

effect of ultrasound on the enhancement will be more evidence when the fluid velocity is lower. The influence of fluid temperature (on the heat transfer enhancement assisted by ultrasound) is mainly related to the acoustic cavitation intensity that may be maximized under a favorable fluid temperature. It is certain that the higher the power level of ultrasound is applied, the higher enhanced ratio of heat transfer will be achieved. However, the energy utilization efficiency should be taken into account because the enhanced ratio doesn't linearly increase with the increasing power of ultrasound applied.

The new technology of heat transfer enhancement by using ultrasound is still far from the pratical applications. According to the experimental results, only 17% of enhanced ratio can be achieved at the cost of 100 W electric power for producing the ultrasound, which indicates that the prospective energy saving brought by this technology becomes less promising. The disatisfying enhancement may due to the low working efficiency of the ultrasound transducer (used in this experimental study) that is primarily for the cleaning applications. Therefore, the specialized ultrasound transducer should be developed for the enhancement of heat transfer in the future study. In addition, the integration of the ultrasound transducer into the heat exchanger is another key problem of this application.

5. ACKNOWLEDGEMENTS

This work was supported by the National Natural Science Foundation of China under contract No. 50708057 and the Specialized Research Fund for the Doctoral Program of Higher Education of China under contract No.2007024811. Especially, the authors will thank Professor Yanqing Chen very much for his help and encouragement.

REFERENCES

Bhowmik, H., Lee, Kwan-Soo, 2009, Analysis of Heat Transfer and Pressure Drop Characteristics in an Offset Strip Fin Heat Exchanger. International Communications in Heat and Mass Transfer, vol.36, no.3:p 259-263

Bonekamp, S., Bier, K., 1997, Influence of Ultrasound on Pool Boiling Heat Transfer to Mixtures of Refrigerants R23 and R134A. International Journal of Refrigeration, vol.20, no.6: p606-615

Farajollahi, B., Etemad, S.Gh., Hojjat, M., 2010, Heat Transfer of Nanofluids in a Shell and Tube Heat Exchanger. International Journal of Heat and Mass Transfer, vol.53, no.1:p 12–17

Fand, R.M., 1965, The Influence of Acoustic Vibrations on Heat Transfer by Natural Convection from a Horizontal Cylinder to Water. Journal of Heat Transfer, vol. 87, no. 2: p309–310.

Fuchs, F.J., 2002, Ultrasonic cleaning: Fundamental theory and application. In NASA. Marshall Space Flight Center, Aerospace Environmental Technology Conference, p369-378

http://en.wikipedia.org/wiki/Ultrasound

Hyun, S., Lee, D.R, Loh B.G., 2005, Investigation of Convective Heat Transfer Augmentation Using Acoustic Streaming Generated by Ultrasonic Vibrations. International Journal of Heat and Mass Transfer, vol.48, no. 6: p703–718

Kim, H.Y., Kim, Y.G., Kang B.H., 2004, Enhancement of Natural Convection and Pool Boiling Heat Transfer via Ultrasonic Vibration. International Journal of Heat and Mass Transfer, vol.47, no. 11: p2831–2840

Lee, C.P., Wang, T.G., 1990, Outer Acoustic Streaming. Journal of the Acoustical Society of America, vol.88, no.5: p2367-2375

Li, K.W., Parker, J.D., 1967, Acoustical Effects on Free Convective Heat Transfer from a Horizontal Wire. Journal of Heat Transfer, vol.89, no. 2: p277–278.

lida, Y., Tsutsui, K., 1992, Effects of Ultrasonic Waves on Natural Convection, Nucleate Boiling and Film Boiling Heat Transfer from Wire to a Saturated Liquid. Experimental Thermal and Fluid Science, vol.5, no.1: p108-115

Nomura, S., Yamamoto, A., Murakami, K., 2002, Ultrasonic Heat Transfer Enhancement Using a Horn-type Transducer. Japanese Journal of Applied Physics, vol.41, no. 5B: p3217-3222

Park, K.A., Bergles, A.E., 2004, Ultrasonic Enhancement of Saturated and Subcooled Pool Boiling. International Journal of Heat and Mass transfer, vol.31, no.3: p664-667

Srisawad, K., Wongwises, S., 2009, Heat Transfer Characteristics of a New Helically Coiled Crimped Spiral Finned Tube Heat Exchanger. Heat and mass transfer, 2009, Vol.45, no. 4: p381-391

Suslick, K.S., 1998, Ultrasound: Its Chemical, Physical and Biological Effects. VCH Publishers, New York, U.S.A

Wong, S.W., Chon, W.Y., 1969, Effects of Ultrasonic Vibration on Heat Transfer to Liquids by Natural Convection and by Boiling. AICHE Journal, vol. 15, no. 2: p281-288