Purdue University
Purdue e-Pubs

International Refrigeration and Air Conditioning Conference

School of Mechanical Engineering

2010

Performance Evaluation of an Economised Indirect Multi-Temperature Transport Refrigeration System

Shane Smyth
University College Dublin

Donal P. Finn
University College Dublin

Barry Brophy
University College Dublin

Follow this and additional works at: http://docs.lib.purdue.edu/iracc

Smyth, Shane; Finn, Donal P.; and Brophy, Barry, "Performance Evaluation of an Economised Indirect Multi-Temperature Transport Refrigeration System" (2010). *International Refrigeration and Air Conditioning Conference.* Paper 1095.
http://docs.lib.purdue.edu/iracc/1095

This document has been made available through Purdue e-Pubs, a service of the Purdue University Libraries. Please contact epubs@purdue.edu for additional information.
Complete proceedings may be acquired in print and on CD-ROM directly from the Ray W. Herrick Laboratories at https://engineering.purdue.edu/Herrick/Events/orderlit.html

PERFORMANCE EVAULATION OF AN ECONOMISED INDIRECT MULTI-TEMPERATURE TRANSPORT REFRIGERATION SYSTEM

S. Smyth, D.P. Finn* and B. Brophy

School of Electrical, Electronic and Mechanical Engineering,
University College Dublin, Belfield, Dublin, Ireland.
*Tel: +353 1 716 1947 Email: donal.finn@ucd.ie

ABSTRACT

Direct expansion (DX) refrigeration technology is almost exclusively used in multi-temperature transport refrigeration systems. Multi-temperature systems use up to three evaporators, requiring large refrigerant charges and system pressure control to operate over a wide range of set-point conditions. Despite incremental design improvements over the past decade, environmental and control issues continue to arise with DX systems. Deployment of indirect refrigeration systems (IDX) offers an alternative approach to address these issues. Indirect systems can however suffer from performance penalties, where reduced cooling capacity and COP occur under certain operating conditions. One strategy, aimed at offsetting the disadvantage of reduced refrigeration capacity, is to incorporate an economiser circuit into the primary cycle of the IDX system. Economiser cycles can enhance the refrigeration effect of the primary refrigerant in the primary to secondary heat exchanger of the indirect system. In this paper, for a multi-temperature transport refrigeration system, the performance of an optimised economised indirect system is compared with a non-economised indirect system and a contemporary direct expansion system. All tests for the economised IDX system were carried out using optimised refrigerant mass flowrate injection ratios, which were established for different operating boundary conditions. Tests were carried out to ATP standard for a Class C multi-compartment vehicle for a range of set point temperatures from -20ºC to +10ºC.

1. INTRODUCTION

Multi-temperature transport refrigeration systems are gaining increased interest due to their potential in reducing the number of transit journeys, operating costs and environmental emissions (Tassou et al., 2009). Multi-temperature systems contain up to three separate climate controlled chambers or boxes containing individual remote evaporators operating in conjunction with a single compressor-condenser unit. Direct refrigerant expansion, as shown in Fig. 1, is almost exclusively used for climate control of the cargo space in multi-temperature systems. These systems are typically subjected to a wide range of ambient and set-point operating conditions giving rise to complex refrigerant pressure control issues. The requirement of independent control of set-point temperature, usually between -20ºC and +10ºC, in any of the three compartments necessitates large refrigerant charges to compensate for the absence of a single non-design condition. Furthermore, the requirement of remote evaporators results in leak-prone distribution lines to/from the central condensing unit (Rivet, 2003). These risks are heightened in light of noise, vibration and harshness associated with the transport environment. Despite considerable developments in DX systems in the past decade, the underlying environmental and control issues continue, challenging their continued use in the cold chain distribution system. Impending legislation, concerning refrigerant charge levels, has strengthened the case for improved alternative technologies in this application sector.

Indirect refrigeration (IDX) has been proposed as an alternative approach to direct expansion refrigeration in stationary applications, including ice rinks (Sawalha et al., 2003), industrial cooling systems (Rivet, 2003) and supermarkets (Hinde et al., 2009), all with considerable success. In transport refrigeration applications (see Fig. 2), IDX systems deploy an environmentally benign heat transfer fluid, cooled by a compact primary refrigeration unit, thereby conditioning the individual chambers. An intermediate heat exchanger facilitates heat transfer with the primary refrigerant and functions as the evaporator of the primary cycle. The leak-prone refrigerant lines and evaporators are thus replaced by a secondary refrigerant circuit with fan-coil coolers within the conditioned spaces. If the secondary working fluid is a liquid, it is usually conveyed around the secondary circuit by means of a circulation pump.

The presence of an intermediate heat exchanger, as shown in Fig 2, represents an additional temperature difference across the IDX system, that results in an increased compressor pressure ratio (relative to DX systems) for similar chamber set-points and which can adversely affect system capacity and COP. For this reason, in transport refrigeration systems, the IDX system may have an inherent performance penalty relative to the DX baseline for similar ATP reference conditions. To ensure comparable performance against the DX baseline, it has been found that indirect system optimisation measures are necessary. Such measures have only been investigated for systems where a single design condition applies. Single temperature stationary developments, where optimisation at system level has been considered include: supermarket systems (Kazachki and Hinde, 2006) and industrial refrigeration systems (Rivet, 2003, Sawalha et al., 2003). Other research, aimed at component optimisation include: heat exchangers (Haglund-Stignor et al., 2007), secondary coolants (Melinder, 1997, Aittomaki and Lahti, 1997, Sawalha and Palm, 2003) and pumping power (Kazachki and Hinde, 2006). Optimised single temperature indirect systems have resulted in comparable performance and reduced environmental impact relative to baseline DX systems (Horton and Groll, 2003). Deployment of larger compressors and heat exchangers has been found to be successful in stationary applications, however these options are not always feasible in transport applications where packaging and weight constraints apply (Morley, 2003). In multi-temperature transport applications, the additional challenge of variable and non-design operating conditions exist, thereby requiring optimisation across the range of anticipated operating conditions, making the design task more challenging.

One design strategy, aimed at offsetting the disadvantage of reduced refrigeration capacity is to incorporate an economiser circuit into the primary cycle of an IDX system. The economiser cycle is used to increase capacity and performance across the expected range of operating conditions, if appropriate mass-flowrates of refrigerant are expanded through the economiser circuit (Smyth et al., 2010). Control of the economiser is implemented by regulation of injection massflow into the economiser cycle. It was previously found that optimum injection ratios exist in heating and cooling modes for either maximisation of capacity or COP or minimization of compressor power, by optimum control of the injection ratio (Smyth et al., 2010). Although an economiser cycle can enhance system performance by modulation of the injection ratio in a controlled manner, its influence in multi-temperature refrigeration systems on indirect system performance relative to a DX baseline system has not been examined to date and this is the focus of the current paper.

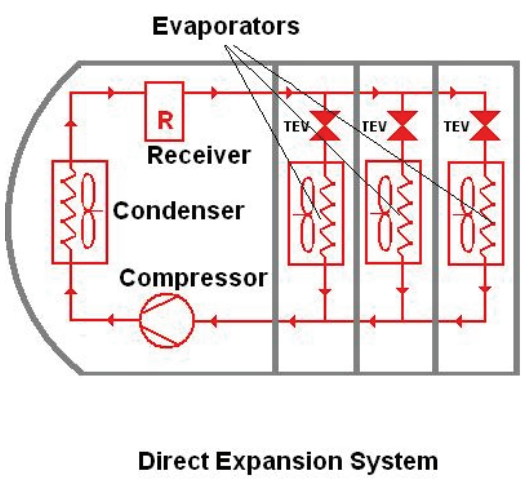

Figure 1. DX Multi-temperature System.

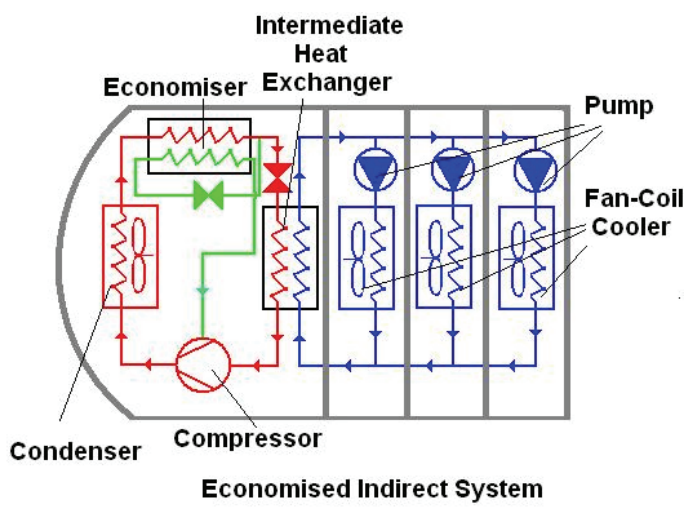

Figure 2. Economised IDX System.

2. APPROACH

Experimental studies were conducted to examine the influence of an optimised economiser cycle on cooling capacity and COP of an indirect multi-temperature transport refrigeration system. Optimisation of the economiser cycle for multi-temperature systems has been reported elsewhere (Smyth et al., 2010). The performance of the optimised system was compared with a non-economised indirect system, as well as with a

contemporary multi-temperature direct expansion transportation refrigeration system. All tests for the optimised economised system were carried out using precisely controlled economiser refrigerant mass flowrate injection ratios, which were established for different ATP test points. R404-A was utilised as the primary refrigerant and separate groups of tests were carried out using inhibited potassium formate (potassium formate / sodium propionate) and ethylene glycol as secondary coolants. Tests were carried out in accordance with ATP procedures for a Class C multi-compartment vehicle for a range of set point temperatures from -20 to +10ºC (ATP, 2003).

3. EXPERIMENTAL

A comprehensively instrumented multi-temperature indirect refrigeration test facility was developed for performance evaluation of indirect refrigeration systems against direct expansion systems. A schematic diagram of the test facility is shown in Fig 3. A commercial multi-temperature DX installation, charged with R404A, was installed alongside the indirect system. The facility was equipped with an economiser circuit on the primary loop, which consisted of a scroll compressor with a vapor injection port and a liquid line heat exchanger. Control of economiser cycle was by regulation of mass-flow injection ratio. An electronic stepper-motor expansion valve enabled continuous modulation of the injected refrigerant flow from zero to maximum. The optimum injection ratio was found to be dependent on ambient and set-point conditions and was selected for each test (Smyth et al., 2010). This was implemented by modulating the stepper motor valve (Beeton and Pham, 2003). A water cooled condenser was deployed with condensing conditions maintained constant by means of a PID unit. Compressor speed was controlled at 50Hz for all tests, as were fans and pumps. For each test, a steady chamber set-point temperature was maintained. The hydronic circuit facilitated interchanging of secondary coolants. For the experimental programme, ethylene glycol (50% concentration by volume) and potassium formate/ sodium propionate (40% concentration by volume) were used as secondary coolants.

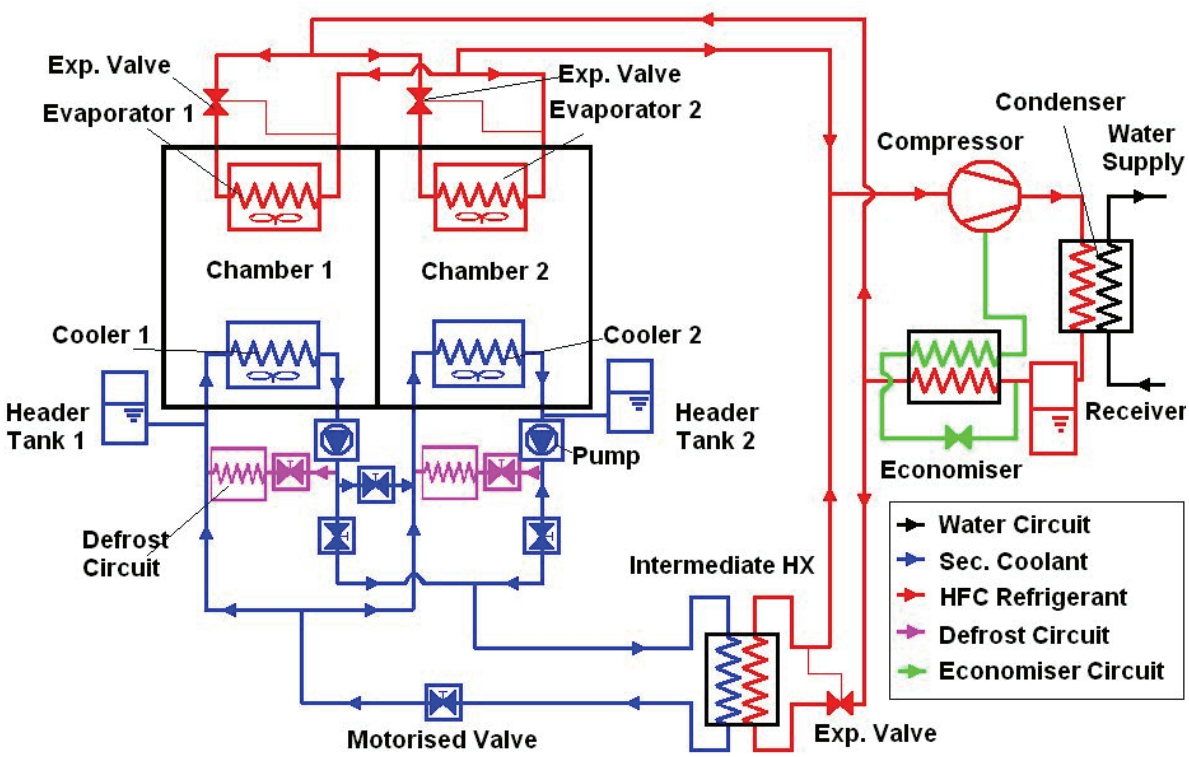

Figure 3. Test Rig Schematic with Economiser Circuit.

4. TEST MATRIX

The wide range of operational temperatures encountered by transport refrigeration systems necessitated the formulation of a test matrix. The matrix, shown in Table 1 considers the key ATP test combinations of -20°C and 0°C, in addition to intermediate test points at -10°C and +10°C. Testing was carried out under identical conditions using ethylene glycol (EG) and potassium formate/sodium propionate (PF). A configurable flow control system was implemented to enable series and parallel flow of the secondary coolants. The test matrix contains four groups of tests, representing the main flow configurations of the secondary circuit. The secondary coolant was configured for parallel flow (Groups 1 & 2), series flow (Group 3) or single zone flow (Group 4). Side-by-side testing was carried with zones at a single temperature (Groups 1 & 4) or at different temperatures (Groups 2 & 3). All experimental testing was carried out with condenser water at an inlet temperature of +22ºC and a flowrate of 15 L/min. Chamber temperature control was implemented by resistance heaters. Box and condensing conditions were maintained ±0.5°C for all tests.

Table 1. Test Matrix.

Group	Flow Categorisation	Test No.	Zone 1 (C)	Zone 2 (C)
1	Single Temperature Parallel Flow	1	-20	-20
		2	-10	-10
		3	0	0
2	Multi-temperature Parallel Flow	4	-20	0
		5	-20	-10
		6	-10	0
3	Series Flow	7	-20	-10
		8	-20	0
		9	-20	10
4	Single Zone Flow	10	-20	N/A
		11	0	N/A

5. EXPERIMENTAL RESULTS

For ethylene glycol, the cooling capacity at the intermediate heat exchanger is shown in Fig. 4. The optimised economiser cycle is capable of increasing significantly the evaporator capacity of the IDX system particularly at lower set-point temperatures (-20,-20°C), resulting in improved capacity performance at the intermediate heat exchanger, despite a reduction in evaporator saturation pressure compared to the reference DX system. For low single temperature parallel flow (Test 1) at -20,-20°C, the economiser cycle was found to augment evaporator capacity from 3.82 kW in the non-economised IDX system to 4.93 kW in the economised IDX system, with reference to a DX capacity of 5.34 kW. At a set-point temperature of 0,0°C (Test 3), the capacity is 7.4 kW for the non-economised IDX system, 8.71 kW for the economised IDX system and 9.66 kW for the DX system, thus the relative improvement in capacity of the economised IDX system compared to the DX system decreases. For the multi-temperature parallel flow tests (Tests 4, 5 and 6), the injection mass flow rate is set so as to maintain an evaporator temperature, so as to ensure the coldest box set-point temperature. Improvement in IDX performance of 13.3% for Test 4 (-20,0°C), 19.4% Test 5 (-20,-10°C) and 11.6% for Test 6 (-10,0°C), relative to the non-economised IDX system was found. Evaporator capacity enhancement of between 11% and 15.2% was evident for the series flow tests (Tests 7, 8 and 9). Excellent performance was noted for single zone operation (Tests 10 and 11), where the economised indirect system was found to outperform the DX system at 0°C and had almost comparable performance at -20°C.

If cooling capacity at the chamber is considered (see Fig. 5), the economised IDX capacity varies between 78% and 86% of DX capacity across the test matrix. In the IDX systems, the input of pump work into the secondary circuits is ultimately dissipated as an additional system refrigeration load, this is particularly evident at low set-point temperatures for ethylene glycol, which is particularly viscous at these conditions. The additional load associated with the pump work input was found to reduce the approach temperature in the chamber cooling

coils, which resulted in a lower chamber cooling capacity, and which ultimately gave rise to an additional refrigeration load on the primary cycle.

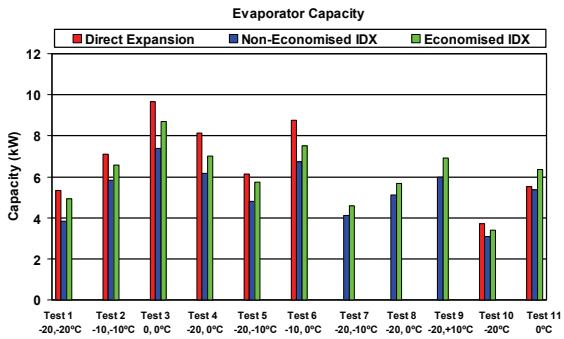

Figure 4. Evaporator Capacity (EG).

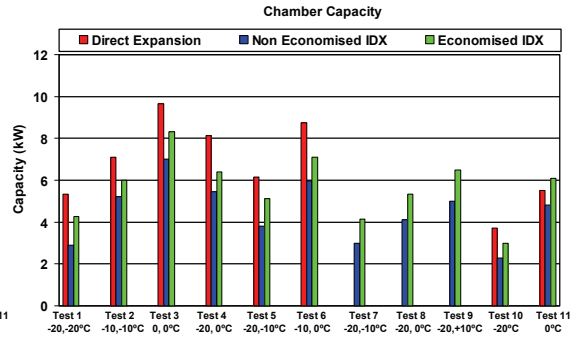

Figure 5. Chamber Capacity (EG).

Fig. 6 shows the COP based on the intermediate evaporator cooling capacity. The presence of the intermediate heat exchanger results in an increased compressor pressure ratio thereby causing a reduction in COP relative to the DX system. The compressor utilised in this work was fitted with injection ports close to main suction port on the scroll involute (low side design), permitting liquid subcooling at the expense of a significant increase in compressor power. The low-side design is generally suitable for capacity enhancement only by an economiser cycle (Beeton and Pham 2003). In Test 1 (-20,-20°C), the evaporator COP is observed to increase relative to the non-economised IDX system. For Tests 2, 3, 4 and 6, a slight reduction in COP of the economised IDX system relative to the non-economised IDX system was evident due to increased compressor power. For high set-point temperatures (Test 11), a slight increase in COP was evident. Considering the overall (chamber) COP as shown in Fig. 7, it was evident that the use of the economised IDX system resulted in an increase in COP, with the exception of Test 3 (0,0^{o}C). The increase in capacity in Figs. 4 and 5 is compounded by a greater increase in compressor power for this test. A net reduction in COP will occur when the increment of compressor power is combined with the power consumption requirements of the secondary pumps.

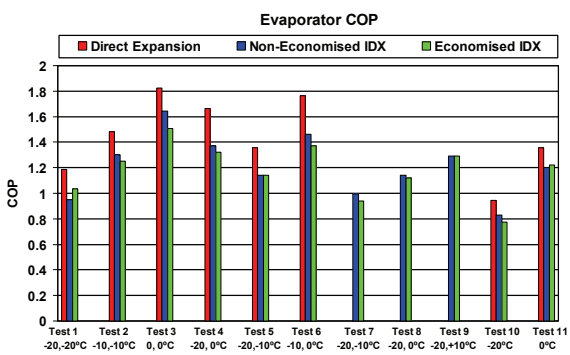

Figure 6. Evaporator COP (EG).

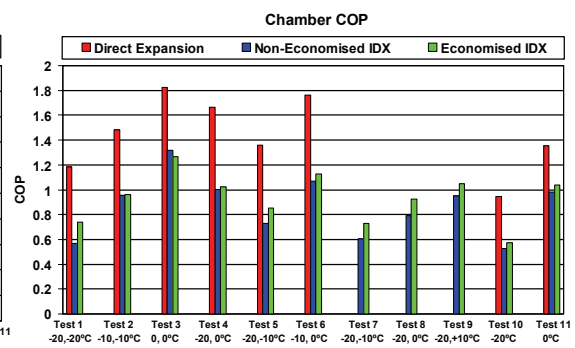

Figure 7. Chamber COP (EG).

For potassium formate/sodium propionate secondary coolant, the evaporator and chamber capacities are given in Figs. 8 and 9 respectively. The thermophysical properties of potassium formate/sodium propionate are considerably better than ethylene glycol, particularly at low temperatures. Since the non-economised system performance and evaporator saturation temperature at low temperatures are higher for the potassium formate/sodium propionate (Smyth et al. 2010), the relative degree of performance enhancement from the economiser cycle, compared to ethylene glycol is reduced. For Test 1 (-20,-20°C), an evaporator capacity of 5.01 kW was noted for the economised case relative to an evaporator capacity of 4.39 kW for the non-economised case and 5.34 kW for the DX system. For Test 2 (-10,-10°C), the economised IDX evaporator capacity was 6.9 kW relative to a non-economised capacity of 6.27kW and a DX capacity of 7.11 kW. At higher box temperatures, Test 3 (0,0^{o}C), the relative capacity enhancement of the economised IDX system was reduced

when compared to the non-economised IDX system and DX system. Although the system was operated with an optimised injection ratio for this setpoint, it was evident that the degree of capacity improvement was less than the equivalent glycol case, despite the favourable properties of the potassium formate as a secondary coolant. This suggests that an alternative optimum may exist, which confirms that the multi-temperature indirect system performance cannot be optimised by implementation of a fixed-setting economiser cycle alone and a self-tuning control algorithm is inevitably required for performance maximisation.

For the multi-temperature parallel flow tests (Tests 4, 5 and 6), the injection massflow is set to maintain an evaporator temperature, so as to realise the coldest box set-point temperature. Improvement in IDX capacity of 9.4% for Test 4 (-20,0^{o}C) and 17.5% Test 5 (-20,-10°C) was evident, with an augmentation of 13.4% evident for Test 6 (-10,0^{o}C). Evaporator capacity enhancement of between 5% and 8.1% was evident for the series flow tests (Tests 7, 8 and 9). Similar to ethylene glycol, excellent performance was again noted for single zone operation (Tests 10 and 11), where the economised indirect system was found to outperform the DX system at 0°C and had essentially comparable capacity at -20°C. If the cooling capacity at the chamber is considered (see Fig. 9), the economised IDX capacity varies between 76% and 88% of DX capacity across the test matrix. The difference between the chamber and evaporator capacities arises from the associated pump work input to the secondary circuit, which manifests as an additional refrigeration load on the system. This reduces the approach temperature in the chamber cooling coils, which results in a lowered chamber cooling capacity.

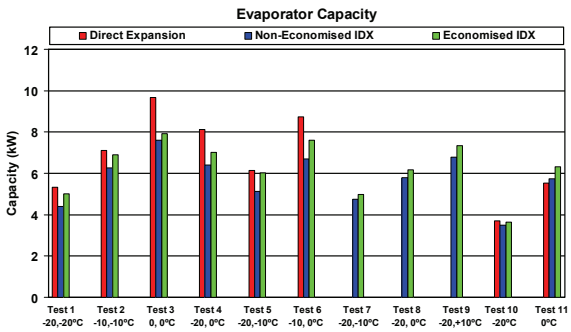

Figure 8. Evaporator Capacity (PF).

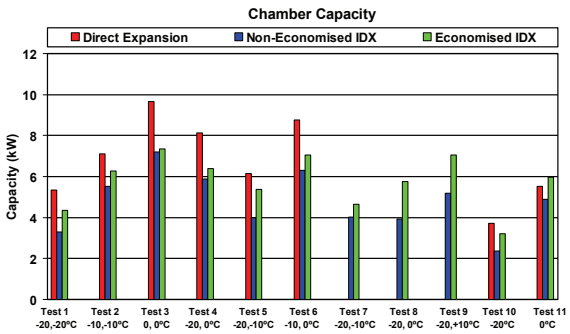

Figure 9. Chamber Capacity (PF).

Examining the COP for Figs. 10 and 11, it can be seen that a decrease in evaporator COP was evident for all tests. A slight increase in chamber COP was evident from Fig. 11 at low temperatures (Test 1, -20,-20ºC and Test 2, -10,-10ºC) relative to the non-economised IDX system. For these low temperature tests, the temperature difference between the air inlet and liquid inlet on the air-side heat exchanger was larger due to the economiser action which increases cooling capacity and COP at the box relative to the non-economised system. This was achieved without any significant increase in pumping power due to the improved thermophysical properties of the potassium formate liquid secondary coolant. Similar trends were evident for Test 5 (-20,-10ºC) and Test 10 (-20ºC). Considering the chamber COP compared to the DX COP, it was observed to be less for all setpoint temperatures across the ATP test range. This arises from the additional power requirements of the liquid secondary pumps as well as the additional compressor pressure lift resulting from temperature glide in the intermediate heat exchanger. Pumping power for potassium formate / sodium propionate was found to be almost independent of setpoint temperature (Smyth et al, 2010), due to good thermophysical properties across the operating range. It was also noted that although comparable capacity was evident for single zone operation (Fig 9, Tests 10 & 11), an overall reduction in COP was evident. This is attributable to the additional power requirements of the secondary circuit pumps.

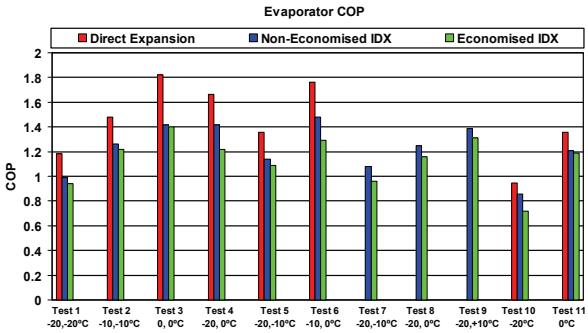

Figure 10. Evaporator COP (PF).

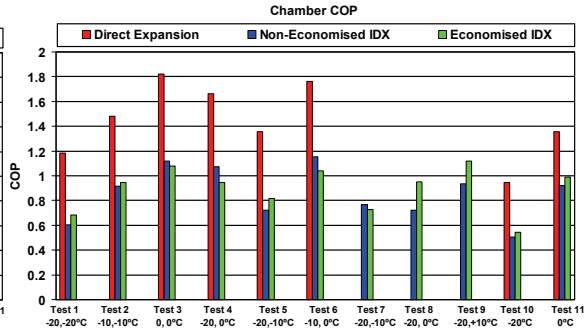

Figure 11. Chamber COP (PF).

Returning to Fig. 7, the use of ethylene glycol as a secondary coolant resulted in a reduction in chamber COP when the economiser cycle was compared with the non-economised cycle at 0,0ºC (Test 3). For this test point, the increase in capacity was compounded by an increase in pumping power due to the increase in secondary coolant viscosity at the lower flow temperatures of the economised system. The favourable thermophysical properties associated with the potassium formate/sodium propionate did not result in a considerable increase in viscosity for low temperature set-points. As a result, the pumping power was not increased when the economiser cycle was used.

6. CONCLUSIONS

It was found that the economiser cycle can be used to augment system capacity and performance. Good capacity improvement can be obtained at low saturation temperatures where the presence of the intermediate heat exchanger can, relative to a DX system, give rise to low evaporator saturation conditions and high pressure lift. For the multi-temperature indirect system, the economiser cycle must be optimised for each operational condition, through regulation of the mass-flow injection ratio through the economiser cycle. Although capacity and COP can be enhanced using the economiser cycle, a greater degree of capacity enhancement was noted over COP enhancement. This was due in part to the compressor design, which was optimised for capacity maximisation due to the close proximity of the injection port to the suction port on the scroll involute. An alternative compressor design with a high pressure injection port located adjacent to the discharge port could provide greater COP enhancement at the expense of capacity enhancement in this application. However it can be concluded from the results presented in this paper that the economiser cycle can be used to enhance capacity and COP of an indirect refrigeration system. This provides a potential mechanism which can be exploited to compensate for the poor performance encountered by IDX multi-temperature systems for certain operating conditions.

ACKNOWLEDGEMENTS

This research was carried out under the auspices of the Innovation Partnership Programme (Project IP-2008-0539), which is administered by Enterprise Ireland. The financial support of Enterprise Ireland and ThermoKing Ltd is gratefully acknowledged.

REFERENCES

Aittomaki, A., Lahti, A., 1997, Potassium formate as a secondary refrigerant *Int. J Refrig,* 20(4), pp276-282.

ATP, 2003, Agreement on International Carriage of Perishable Foodstuffs, *UNECE*, An.1, (3), pp12-34.

Beeton, W.L., Pham, H.M., 2003, Vapour-Injected Scroll Compressors, *J. ASHRAE,* April 2003, pp22-27.

Haglund Stignor, C., Sunden, B., Fahlen, P., 2007, Liquid side heat transfer and pressure drop in finned tube cooling coils operated with secondary refrigerants, *Int J. Refrig,* 30, pp1278-1289.

Hinde, D., Zha, S., Lan, L., 2009, Carbon Dioxide in North American Supermarkets*, J. ASHRAE,*51(2), p18-26.

Horton, W.T., Groll, E.A., 2003, Secondary Loop Refrigeration in Supermarket Applications – A case study, ICR0345 *Proc 21st IIF/IIR Int Cong. Refrig*, Washington DC, USA.

Kazachki, G. S., Hinde, D.K., 2006, Secondary Coolant Systems for Supermarkets, *J. ASHRAE*, 48(9), pp34-46.

Melinder, A., 1997, Thermophysical properties of liquid secondary refrigerants, *IIF/IIR* (Paris), 1997.

Morley, J.R., 1998, Refrigerant Fluids for Refrigerated Transport *Proc IIF/IIR Commission D1/2/3*, Cambridge, UK, 1998.

Rivet, P., 2003, Indirect versus direct systems in medium and large cooling plants, ICR0609, *Proc 21st IIF/IIR Int Cong Refrig*, Washington DC, USA.

Sawalha, S., Palm, B., 2003, Energy consumption evaluation of indirect systems with CO2 as a secondary refrigerant in supermarket refrigeration, ICR0434, *Proc 21st IIF/IIR Int. Cong Refrig,* Washington DC, USA.

Smyth, S., Finn, D.P., Brophy, B., 2010, Influence of mass-flow injection ratio on an economised indirect multi temperature transport refrigeration system, Proc 1st IIF/IIR Cold Chain Conference, Cambridge, UK.

Tassou, S.A., De-Lille, G., Ge, Y., 2009, Food transport refrigeration – Approaches to reduce energy consumption and environmental impacts of road transport, *Appl Th. Eng*, 29, pp1467-1477.