Purdue University
Purdue e-Pubs

International Refrigeration and Air Conditioning Conference

School of Mechanical Engineering

2010

Refrigeration Cycle With Ejector for Second Step Compression

Mark J. Bergander
Magnetic Development

Dariusz Butrymowicz
Institute of Fluid-Flow Machinery

Kamil Smierciew
Institute of Fluid-Flow Machinery

Jaroslaw Karwacki
Institute of Fluid-Flow Machinery

Follow this and additional works at: http://docs.lib.purdue.edu/iracc

Bergander, Mark J.; Butrymowicz, Dariusz; Smierciew, Kamil; and Karwacki, Jaroslaw, "Refrigeration Cycle With Ejector for Second Step Compression" (2010). *International Refrigeration and Air Conditioning Conference.* Paper 1053.
http://docs.lib.purdue.edu/iracc/1053

This document has been made available through Purdue e-Pubs, a service of the Purdue University Libraries. Please contact epubs@purdue.edu for additional information.
Complete proceedings may be acquired in print and on CD-ROM directly from the Ray W. Herrick Laboratories at https://engineering.purdue.edu/Herrick/Events/orderlit.html

Refrigeration Cycle With Ejector for Second Step Compression

Mark J. BERGANDER[1]*, Dariusz BUTRYMOWICZ[2], Kamil SMIERCIEW[2], Jaroslaw KARWACKI[2]

[1]Magnetic Development, Inc.,
Madison, CT, USA
Phone: 203-318-8079, mark@mdienergy.com

[2]Institute of Fluid-Flow Machinery, Polish Academy of Sciences,
Gdansk, Poland
butrym@imp.gda.pl, phone: +48 058 6995 299, fax: +48 058 3416 144

* Corresponding Author

ABSTRACT

The paper contains the most important results of the investigations focused on the implementation of a two-phase ejector as a second-step compressor in compression refrigeration systems. The basic principles of the system as well as the dedicated test-stand specially for this project are described. The results of the experimental investigations of the two-phase ejector various geometries are then presented for operation with refrigerant R-507. The exemplary results are shown in terms of the temperature and pressure distributions in the ejector as well as performance characteristics. Additionally, an analysis of the system COP is presented.

1. INTRODUCTION

The general motivation to modify the classic one-stage compression refrigeration system to two-stage compression-ejection system is increasing COP. This paper deals with aspects of application of a two-phase ejector as a second stage compressor in refrigeration systems. The schematic of the investigated system and the compression-ejection cycles in log(*p*)-*h* diagram are shown in Fig. 1. This configuration was proposed and patented by Bergander [1].

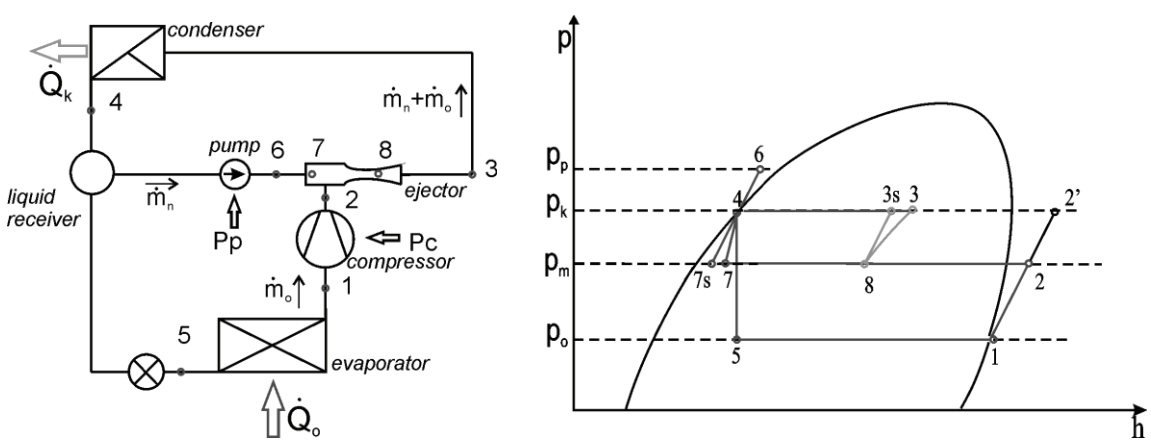

Figure 1. Schematic of a refrigeration compression system with a two-phase ejector as a second stage compressor.

Vapor, which is compressed in the mechanical compressor is sucked in by the ejector. The motive fluid in the ejector is liquid refrigerant pressurized by a mechanical pump. This configuration represents a totally novel approach for improving the efficiency of the refrigeration cycle by means of two-phase liquid-vapor ejector.

The efficiency improvement in the presented system results from the fact that less mechanical work is required to compress a liquid than to compress a vapor. Therefore increasing the efficiency of the standard single-stage vapor compression cycle is achieved by reduction of mechanical compression at the expense of harnessing kinetic energy of a vapor in the ejector device. The suction point *1* is located at the saturation line. Although isentropic compression was assumed, but the internal efficiency of the mechanical compressor has been included in the analysis. The important features of the system are two additional pressures: inter-stage pressure p_m and corresponding inter-stage saturation temperature T_m, as well as pump motive pressure p_p and liquid phase temperature T_p. Therefore the discharge of the mechanical compressor is represented by point *2* while in conventional one-stage system, the discharge is located in point *2*'.
Another assumption made in Fig. 1 was that no subcooling at the outlet of the condenser (point *4*) was present. For liquid compression, an isentropic process was assumed. If the expansion process of the liquid phase occurs isentropically, then the outlet of the ejector motive nozzle is represented by the point *7s*. Taking into account an efficiency of the motive nozzle – real outlet is located at the point *7*. In most practical cases, wet vapor is expected at the outlet from the motive nozzle due to flashing. The quality of the vapor discharged from the motive nozzle depends on the nozzle efficiency as well as possible liquid subcooling for the given operating pressures in the system. Further, a common approach for ejector operation was assumed, specifically that the mixing process and compression process due to momentum exchange were separated. Moreover, the mixing process of the discharged vapor from a compressor *2* and fluid expanded in the motive nozzle *7* was assumed as being isobaric. Compression process due to a momentum and energy transfer between motive fluid and secondary fluid (vapor discharged from mechanical compressor) is represented by compression line *8-3s* for the ideal case of isentropic compression and *8-3* for real compression in the mixing chamber and the diffuser. Location of point *8* as well as point *3* depends on the entrainment ratio of the ejector, which is not visible in the thermodynamic charts. Condensation process is represented by line *3-4*, which shows that wet vapor enters the condenser. Liquid phase flows to the receiver and then it is delivered to a pump in order to motive the ejector. Another part of the liquid is delivered to the expansion valve feeding the evaporator. It was assumed that the saturated vapor is discharged at the evaporator outlet. In case when a thermostatic expansion valve is used , the superheated vapor enters the mechanical compressor.

2. EXPERMIMENTAL METODOLOGY AND APPARATUS

The test facilities were designed and built specially for the purpose of these investigations. The already available testing loop, originally designed for R22, was modified and instrumented for refrigerant R-507 in order to perform experiments with the two-phase ejector under conditions of high operating pressures.

The schematics of the experimental apparatus, with the two-phase ejector, is shown in Fig. 2. The system consists of three loops: the refrigerant loop, the cooling liquid loop, and the heating liquid loop. The main parts of the refrigeration loop are: investigated ejector 1, compressor 2, liquid receiver 3, refrigerant pump 4, condenser 6, evaporator 9. Liquid refrigerant is the motive fluid, while vapor sucked in from the compressor is the secondary (suction) fluid. The liquid refrigerant, after condensing in condenser 6 is stored in liquid receiver 3 and flows through the pump 4. The flow of refrigerant at high pressure is then split after the pump; one part flows through the expansion valve to the evaporator while the other part flows to the ejector as a motive fluid. The motive liquid flow rate is controlled by changing the capacity of the refrigerant pump. The test-stand is additionally equipped with a control valve, 10 (to serve as a back-pressure valve) and two shutting valves a, b.

Our initial goal was to investigate the effect of the mixing chamber geometry as well as the effect of the operating parameters on the efficiency and compression ratio of the ejector. In order to meet these goals, two different methodologies were used:
I – To investigate pure characteristics of the two-phase ejector (without compressor), the valve (a) has to be closed and the valve (b) open. In this case most of the parameters are independent. The evaporator works as a high pressure vapor generator controlled by the throttling valve and heat load. The values of vapor pressure, vapor superheat, liquid temperature and mass flow rate were kept constant. The performance of the ejector was investigated by changing the outlet pressure by means of the back-pressure valve 10. Such methodology allows to investigate various ejector geometries in a wide range of parameters (back pressure, motive fluid flow rate, pressure in suction line). The pressure distributions in the ejector for various compression ratios was measured by piezoelectric pressure sensors installed at various locations along the ejector length.

II - To investigate performance of the entire compression-refrigeration system (with compressor), the valve (a) has to be opened and (b) closed. Note that in this case parameters in the cycle are not independent. The performance of the refrigeration system with and without two-phase ejector was evaluated for various operational parameters.

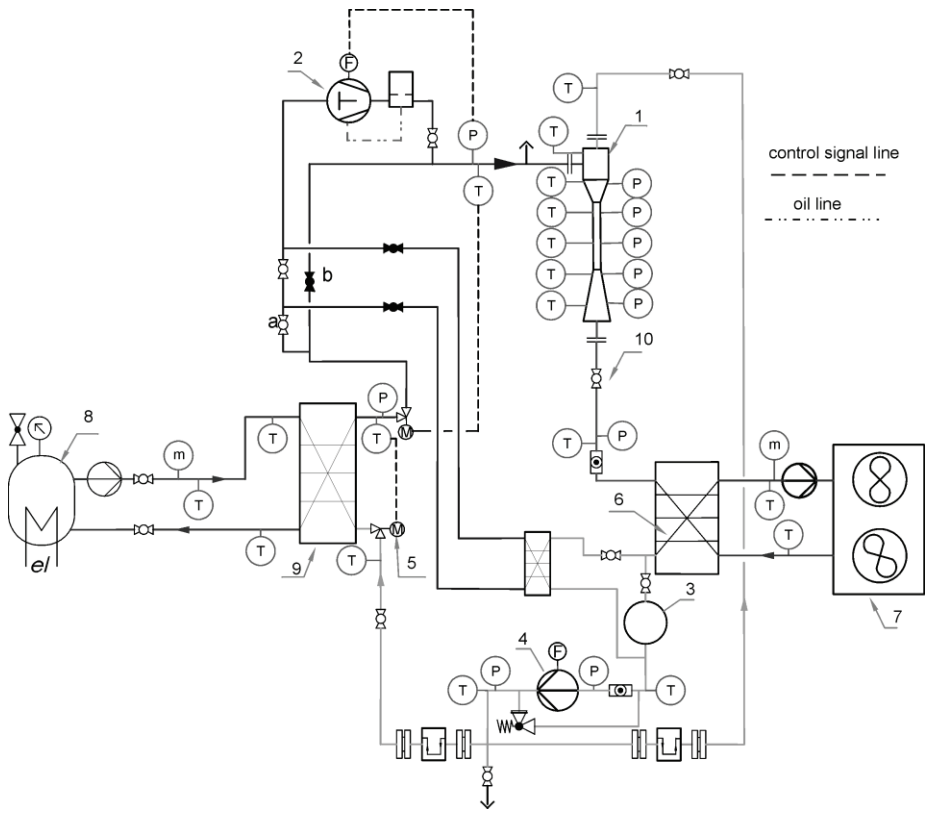

Figure 2: General layout of the experimental stand: 1 – two-phase ejector , 2 – compressor, 3 – liquid receiver, 4 – refrigerant pump, 5 – expansion valve, 6 – condenser, 7 – fan cooler, 8 – electrical heater, 9 – evaporator, 10 – control valve

The stand was equipped with a single-stage open compressor in order to investigate application of the two-phase ejector in refrigeration systems for second-stage compression. A frequency converter was installed for a continuous control of compressor speed (capacity of the compressor). The remaining components installed on the test stand are: two liquid pumps, mass flow meters (Coriolis-type), electronic throttling valves. The test-stand was equipped with temperature sensors and pressure transducers installed in the critical locations and other locations of interest. Additionally, sight-glasses were installed at various locations to visually observe the flow. The test rig is equipped with two additional loops: one for thermal load and another for condenser cooling. These systems allow for adjusting refrigerant flow rates as well as for varying thermal parameters in a wide range. The condenser cooling system was equipped with automatically controlled fan cooler 7. The thermal load system was equipped with automatically controlled electrical heater 8. Both systems are fully instrumented with transducers for measuring temperatures, pressures and flow rates with high accuracy. The design of the entire test rig allows to maintain all test parameters precisely within a specific range.

For all data acquisition, a modular system with low-noise chassis and dedicated amplifiers connected to high-speed multifunction DAQ installed in the PC was used. The computer uses a dedicated software with additional toolkits. This software is capable to receive on-line data from the NIST data base.

Two different geometries of the ejector body have been tested - the main difference between them was the diameter of the mixing chamber and the diameter and length of the diffuser. These ejectors were named Ejector I and Ejector II as follows:

Ejector I, shown in Fig. 3 with the diameter of the mixing chamber of 6.0 mm and length of the mixing chamber of 40.0 mm. The length of the diffuser is 68.5 mm and its outlet diameter is 18.0 mm,

Ejector II, shown in Fig. 4 has the mixing chamber diameter of 4.0 mm and the length 40.0 mm, the length of the diffuser is 45.5 mm and its outlet diameter is 11.95 mm.

Both ejectors were fitted with exchangeable sharp-edge motive nozzles of various throat diameters. For ejector I, the distance from the outlet of the motive nozzle to the inlet to the mixing chamber was 5.0 mm, while in the case of the Ejector II, it was 6.3 mm. Various throat diameters of the motive nozzle were used in the investigations: 2.0 mm, and 1.01 mm for the Ejector I; and 1.20 and 1.01 mm for the Ejector II.

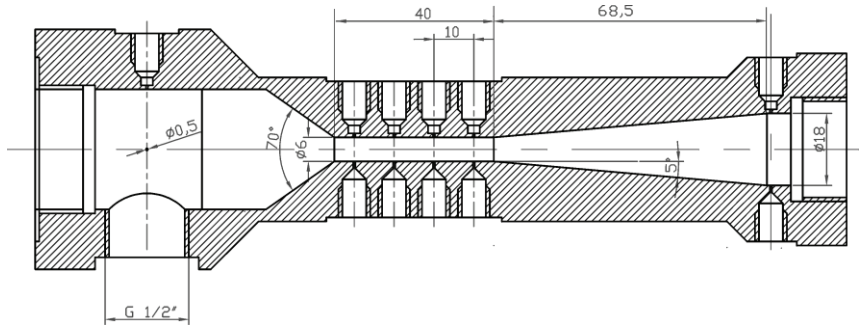

Figure 3: Ejector I, mixing chamber of 6.0 mm diameter

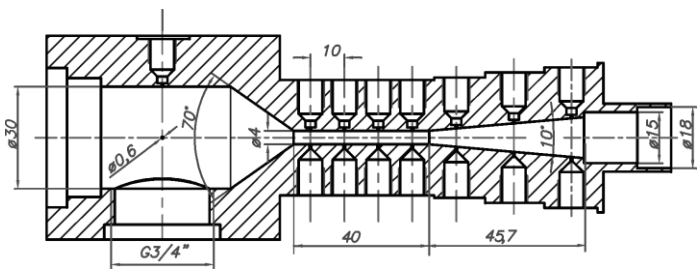

Figure 4: Ejector II, mixing chamber of 4.0 mm diameter

3. EXPERIMENTAL RESULTS

Ejector Characteristics

Investigations have been carried out with refrigerant R-507, which is very similar in physical and thermodynamical properties to widely used refrigerant R-404A. The advantage of the R-507 is the fact that it is the azeotropic mixture and therefore the operation parameters in the two-phase zone are significantly easier to predict. One of major goals for these experiments was to find the appropriate geometry for achieving the highest possible compression and entrainment ratios. These quantities are defined as follows: mass entrainment ratio:

$$U = \frac{\dot{m}_v}{\dot{m}_g} \tag{1}$$

and a compression ratio:

$$\Pi = \frac{p_d - p_e}{p_g - p_e} \tag{2}$$

where: $\dot{m}_g$ – mass flow rate of the motive liquid; $\dot{m}_v$ – mass flow rate of the entrained vapor, p_d – pressure at the diffuser outlet, p_e – ejector suction pressure, p_g – pressure at the motive nozzle inlet.

The basic two-phase ejector theory tells us that the high compression ratios may be only achieved for low entrainment ratios and the opposite is also true. The module of the ejector is defined as:

$$b = \left(\frac{D_n}{D_m} \right)^2 \tag{3}$$

where D_n is the throat diameter of the motive nozzle, and D_m is the diameter of the mixing chamber.
It was shown in [6] that the optimum module is equal to:

$$b_{opt} = \Pi / \varphi_n^2 \tag{4}$$

where φ_n is the velocity coefficient for the motive nozzle. In the discussed application of the ejector we cannot draw any conclusion about the required compression ratio since it depends on the operation of the pump. It is however important, that entrained vapor mass flow rate is equal to total mass flow rate of refrigerant flowing through the evaporator and compressor. Therefore, the entire amount of refrigerant flowing in main parts of the refrigeration unit has to be sucked in by an ejector. This means that high entrainment ratio is required and this was our primary motivation to choose a relatively small diameter of the motive nozzle. For D_n = 2.00, b = 0.111, and for D_n = 1.01 mm we had b = 0.028.

All experimental results are presented in the final report [5]. The exemplary pressure distribution along ejector is presented in Fig. 5 and characteristics for two investigated ejectors with various nozzles diameter are shown in Fig. 6 and 7. As it could be expected, significantly higher entrainment ratio as well as lower compression ratio has been achieved for the case of the smaller nozzle diameter, especially for ejector I. For ejector II the differences between compression ratios for various nozzle diameters are not significant, but the ejector can operate with higher mass entrainment ratios.

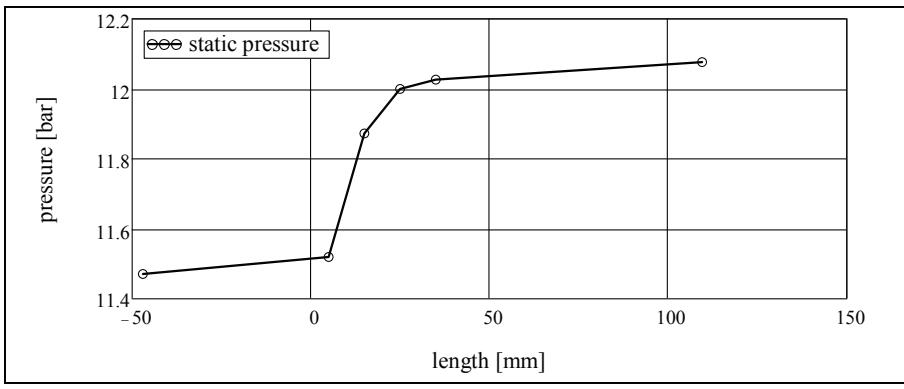

D_n [mm]	2.0
T_g [°C]	23.9
p_g [bar]	15.3
T_e [°C]	24.2
p_e [bar]	11.5
T_d [°C]	22.4
p_d [bar]	12.1
$\dot{m}_g$ [kg/h]	239.3
$\dot{m}_v$ [kg/h]	0.05

Figure 5. Pressure distribution along Ejector I

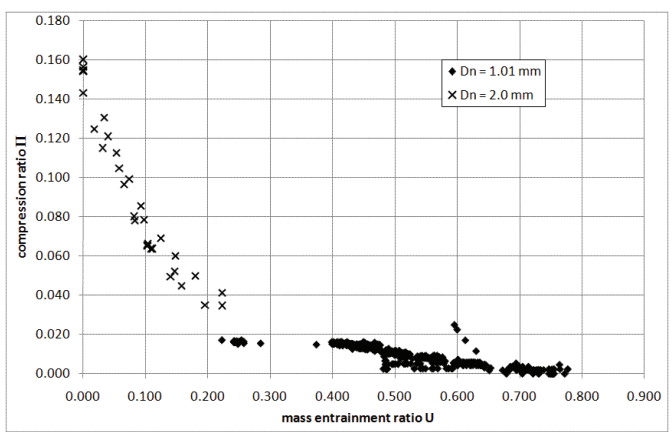

nozzle diameter D_n = 1.01 mm and D_n = 2.0 mm
Figure 6: Performance characteristics *U-Π* of the Ejector I

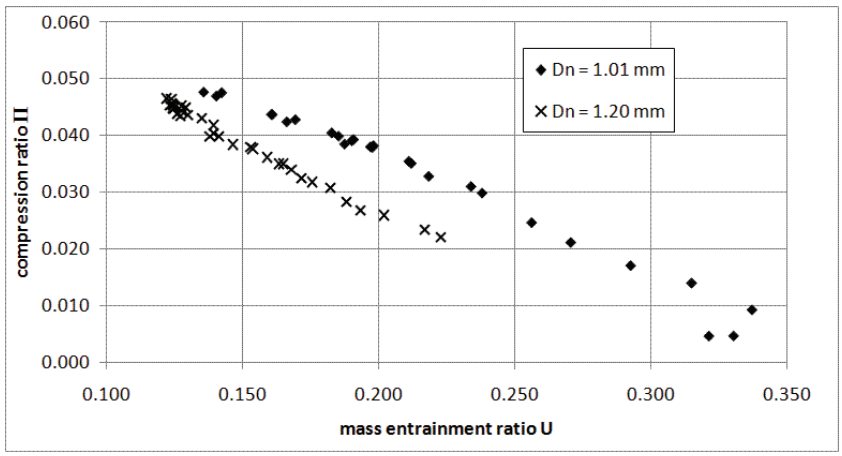

nozzle diameter D_n = 1.01 mm and D_n = 1.20 mm
Figure 7: Performance characteristics *U-Π* of the Ejector II

Investigation of the Compression System Equipped with an Ejector

The experimental results for the system equipped with Ejector I - with motive nozzle diameter of D_n = 1.01 mm (i.e. with modulus b = 0.028) in graphic form are presented on Fig. 8. For all test runs, the system COP was determined from equation (5).

$$COP = \frac{\dot{Q}_{oe}}{P_e} = \frac{1}{\frac{\dot{Q}_{ke}}{\dot{Q}_{oe}} - 1} \tag{5}$$

where Q_{oe} is capacity of evaporator, and Q_{ke} is capacity of condenser. P_e is total consumption of the motive energy (both for the compressor and the liquid pump), evaluated from the energy balance for the entire system.

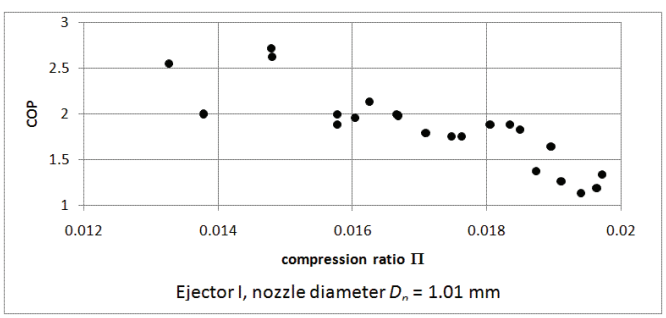

Figure 8: COP of the cycle versus compression ratio Π for the compression cycle equipped with Ejector I

It can be concluded that COP increases for lower compression ratios, and consequently, for higher mass entrainment ratios. This is one of the most important features concerning the investigated system, since high mass entrainment ratio is necessary for improving the cycle efficiency. The theoretical expectations have been therefore evaluated experimentally. Considering previous discussions about the ejector geometry (module b) as well as relationship between COP and compression ratio (Fig. 8) it was concluded that the change of the motive nozzle diameter could not be able to improve COP values since the higher motive nozzle throat diameter will produce lower mass entrainment ratio and higher ejector compression ratio. Thus, we decided to investigate another possibility for COP increase – which was the change of the mixing chamber geometry. This was accomplished by installing Ejector II.
Results of calculations of COP for the system equipped with Ejector II - with motive nozzle diameter of D_n = 1.01 mm (b = 0.064) are presented on Fig. 9.

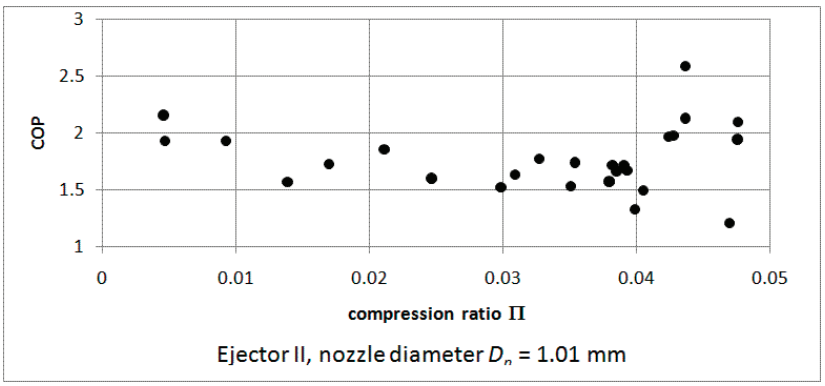

Figure 9: COP of the cycle versus compression ratio Π for the compression cycle equipped with Ejector II

Additionally, in order to investigate the effect of the ejector operation on the system efficiency, it is necessary to establish the basis, which is the efficiency of the conventional system without the ejector. However, the precise comparison between the system operating with and without an ejector is complicated due to limitations of the test-stand. For the reference measurement (i.e. system without an ejector) the actual system operated with an ejector but the liquid was not supplied to the motive nozzle. The vapor discharged from the compressor flows through the ejector body into the condenser. Therefore the ejector body was treated as the discharge line. No significant pressure losses were encountered under such operating conditions due to the presence of such "dummy" ejector. In order to compare the cycle operation with and without ejector, the following COP ratio Ψ was introduced

$$\Psi = \frac{COP_e}{COP_o} \tag{6}$$

where subscript "e" refers to the cycle with an ejector and "o" without an ejector (reference cycle). The comparison of the system efficiency, calculated from eq. (6) with and without ejector is shown in Fig. 7.

In general, the COP increases with increasing mass entrainment ratio and decreasing ejector compression. The COP ratio *Ψ*, calculated from equation (6), and shown in Fig. 10, indicates that the power consumption of the liquid pump was higher than power savings in a compressor. Also a plateau for the lowest ejector compression ratio was observed.

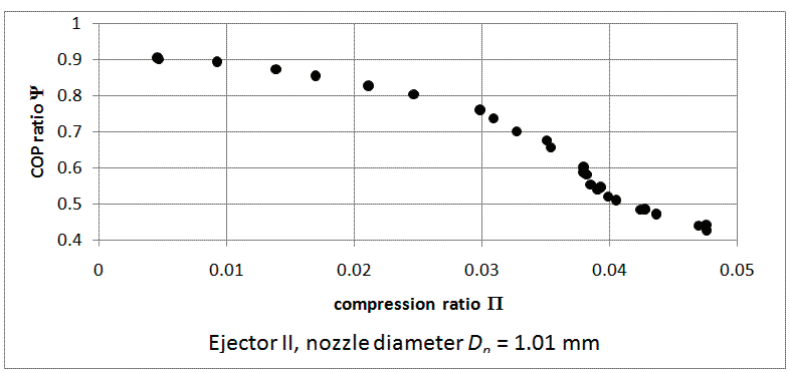

Figure 10: COP ratio *Ψ* versus ejector compression ratio *Π* for the compression cycle equipped with Ejector II

Even thought the geometry of Ejector II had improved the cycle efficiency for higher compression ratios, still the increase of COP was somewhat limited. Comparing data obtained for both ejector geometries, it was observed that COP increases with increasing of the entrainment ratio, which in turn is possible for low modulus *b*. Reported results of nozzle tests, suggest that higher *b* (i.e. for greater nozzle diameter) should result in further decrease of the COP ratio *Ψ*. However, to prove this hypothesis, further tests should be performed. At this time, testing motive nozzles with smaller diameters is not planned due to limitations in our test stand. Specifically, smaller nozzles

require significantly higher motive pressures - in the range beyond the capabilities of our pump. The condensation pressure p_k and evaporation pressure p_o were both kept constant while inter-stage pressure p_m was varying due to changes of the motive liquid mass flow rate $\dot{m}_{li}$ and motive liquid pressure p_{li}.

4. CONCLUSIONS

On the basis of the presented results it is possible to draw the following conclusions:

- The stable operations of the ejector is possible under the whole range of the operation parameters.
- The compression ratio achieved in the experiments corresponds with expectations for the typical level of the two-phase ejectors.
- One of the most important conclusion was that COP increases at lower compression ratio and higher mass entrainment ratio. Therefore, high mass entrainment ratio is necessary to improve the cycle efficiency. The experiments have confirmed that COP increases with increasing mass entrainment ratio and decreasing ejector compression.
- Indicated limitations in COP improvement pertain only to the refrigerant used for these experiments, i.e. R-507. It is expected therefore that other working fluids with different thermodynamic properties (i.e. CO_2 or hydrocarbons, which have more favorable density ratio of liquid vs. vapor phases) offer attractive possibilities for further studies.

5. REFERENCES

[1] Bergander, M., Schmidt, D.P., Herbert, D.A., Wojciechowski, J., Szklarz M., 2008, Condensing ejector for second step compression in refrigeration cycles, *International Refrigeration and Air Conditioning Conference*, Purdue, USA, Paper No. 2174.

[2] Butrymowicz, D., 2003, Improvement of compression refrigeration cycle by means of two-phase ejector, *21st International Congress of Refrigeration*, Washington D.C., USA, Paper No. ICR0310, 2003.

[3] Butrymowicz, D., Karwacki, J., Miąskowska, D., Trela, M., 2007, Performance of two-phase ejector of various geometries, *22nd International Congress of Refrigeration*, Beijing China, Paper No ICR07-B1-1269.

[4] Bergander, M., 2006, Refrigeration cycle with two-phase condensing ejector, *International Refrigeration and Air Conditioning Conference*, Purdue, USA, Paper No. R008.

[5] Bergander, M., Butrymowicz D., 2009, *Two-phase liquid-vapor ejector for compression refrigeration system*, US DOE Project No. DE-FG36-06GO16049, 2009. Final Scientific Report.

[6] Butrymowicz, D. et al., 2001, Experimental investigations of the effect of nozzle geometry on performance of water-air ejector, Transactions of the Institute of Fluid-Flow Machinery, Vol. 108, pp. 137-156.

ACKNOWLEDGEMENT

The material in this paper is based on the work supported by the US Dept. of Energy, I & I Project No. DE-FG36-06GO16049 and by National Science Foundation under STTR Phase II Award No. 0822525

DISCLAIMER

This report was prepared as an account of work sponsored by an agency of the United States Government. Neither the United States Government nor any agency thereof, nor any of their employees, makes any warranty, express or implied, or assumes any legal liability or responsibility for the accuracy, completeness, or usefulness of any information, apparatus, product, or process disclosed, or represents that its use would not infringe privately owned rights. Reference herein to any specific commercial product, process, or service by trade name, trademark, manufacturer, or otherwise does not necessarily constitute or imply its endorsement, recommendation, or favoring by the United States Government or any agency thereof. The views and opinions of authors expressed herein do not necessarily state or reflect those of the United States Government or any agency thereof.