Purdue University
Purdue e-Pubs

International Refrigeration and Air Conditioning Conference

School of Mechanical Engineering

2008

Entropy Generation Analysis and Optimum Tube Length of Two-Phase Flow Evaporator Tube

Obiora Sam Ezeora
University College Dublin

Follow this and additional works at: http://docs.lib.purdue.edu/iracc

Ezeora, Obiora Sam, "Entropy Generation Analysis and Optimum Tube Length of Two-Phase Flow Evaporator Tube" (2008). *International Refrigeration and Air Conditioning Conference.* Paper 961.
http://docs.lib.purdue.edu/iracc/961

This document has been made available through Purdue e-Pubs, a service of the Purdue University Libraries. Please contact epubs@purdue.edu for additional information.
Complete proceedings may be acquired in print and on CD-ROM directly from the Ray W. Herrick Laboratories at https://engineering.purdue.edu/Herrick/Events/orderlit.html

Entropy Generation Analysis and Optimum Tube Length of Two-Phase Flow Evaporator Tube

Obiora EZEORA

School of Electrical, Electronic & Mechanical Engineering
University College Dublin, Belfield, Ireland
Phone: +353 1 716 1978, Fax: +353 1 283 0534, Email: obiora.ezeora@ucdconnect.ie

ABSTRACT

Due to the dependence of boiling heat transfer rate on heat flux, saturation pressure, mass flux and refrigerant quality, efforts made to increase heat transfer rate often cause further drop in refrigerant saturation pressure. In this study, entropy generation mechanisms associated with two-phase flow in smooth evaporator tube subject to constant surface heat flux are investigated. Refrigerant flow was considered annular, steady and one-dimensional. Separated fluid model was applied and flow path discretised. The governing equations were solved for fluid properties and heat transfer coefficient at each discretised section using Newton-Raphson finite difference numerical technique. Entropy generation analysis was also conducted and the evaporator tube parameters optimized subject to pressure drop and volume constraints. It is shown that tube dimensions of length and diameter which result in minimum entropy generation rate may not necessarily be the optimum tube parameters. Optimum tube parameter is obtained that satisfies all given conditions.

1. INTRODUCTION

In recent times, tube heat exchangers utilizing natural refrigerants are playing important roles in low- and medium-temperature refrigeration systems involving flow boiling and condensation phenomena. It lends support, in form of array of tubes, to compact heat exchangers where surface area density greater than $700 m^2/m^3$ is required (Kakac and Liu, 2002). The performance of tube heat exchangers among other things is affected by the choice of tube parameters. When flow with phase-change occurs in the inner tube, the choice of tube parameter will affect the rate of generation of entropy due to heat transfer, wall shear on liquid, wall shear on vapor and even relative motion. Tube parameter used in this context refers to tube dimensions of length, diameter and thickness. Consequently, operating the tubular arrangement in a way that minimizes the total entropy generation rate, subject to some constraints would result in an improved performance. Thus, there is need to minimize the total entropy generated subject to some constraints. The outcome of such optimization usually results in knowledge of optimum tube design for the given conditions.

In this study, an analysis of entropy generation rate in a tube containing two-phase refrigerant and subject to constant heat flux is presented. Fluid flow is considered to be steady, annular and one-dimensional. In order to obtain the temperature profiles and fluid properties needed in evaluating minimum entropy generation rate, governing equations of mass, energy and momentum were employed using separated fluid model. The governing equations were solved using Newton-Ralphson finite difference numerical technique along the flow path until convergence is achieved. The predicted distributions were used in evaluating the total entropy generated for various conditions. Model was validated using data available from the literature for boiling R22 refrigerant. Using the concept of entropy generation minimization technique, the study evaluated the optimum tube parameter needed for a given heat load, subject to volume and pressure drop constraints. Further details of the numerical technique and solution method are presented in section 3.

2. LITERATURE REVIEW

Entropy generation minimization technique and its application to analysis of thermal systems have been treated in literature (Bejan 1996; Bejan 1982; Bejan 1982b). The technique has been employed by numerous investigators to thermal systems involving single phase flow (Khan 2007; Ratts 2004; Al-Zaharnah 2003; Sahin 2002). In such analysis, laminar and turbulent flows through tubes subjected to constant surface heat flux condition were considered. Fluid-flow was assumed to be fully developed thereby facilitating the assumption of a constant value for heat transfer coefficient during thermal analysis. Results from the single-phase systems show a strong dependence of entropy generation rate with Reynolds number. Ratts (2004) demonstrates that the optimal Reynolds numbers in laminar and turbulent flow vary inversely with the tube shape factor (i.e. ratio of tube perimeter to hydraulic diameter). Furthermore, Ratts shows that the change in entropy generated due to heat dissipation is smaller than that due to viscous dissipation for a laminar flow from which there is small deviation in optimal Reynolds number.

For systems involving two-phase flow, data available in literature on entropy generation analysis and design optimization is limited. Domanski et al (2004) presented a model (ISHEDI) for heat exchanger design based on non-Darwinian evolutionary computation method for optimizing tube parameters. Domanski et al (2004) is not based on entropy generation minimization technique. Cavallini (2002) conducted an optimization analysis for a condenser containing two-phase refrigerant using the penalty factor method. The work examined the two penalizing factors (frictional pressure drop and refrigerant side temperature difference) affecting condenser thermal performance. The optimum condensing length for the operating condition was found. Granryd (1992) carried out investigations using classical equations of heat transfer rate and pressure drop to obtain minimum evaporator pressure drop. The work utilized bulk average fluid properties, an average frictional factor and an average heat transfer coefficient in the analysis; and it concluded that the evaporator should be designed such that the pressure drop corresponds to about one-fourth of the temperature difference due to heat transfer on the refrigerant side. The work also presented an equation for calculating the optimum tube length based on minimization of pressure drop.

The present study is different from Granryd (1992) due to a number of factors as follows. First, the present study is based on entropy generation minimization technique. Second, the evaporator is discretised and local values of fluid properties; frictional factor and heat transfer coefficient are used in the thermal analysis. The local values were determined using a new solution method. Third, updated correlations with higher degree of prediction accuracy within the operating condition considered were used. Fourth, the present study is capable of being applied to all refrigerants including natural refrigerants such as carbon dioxide.

3. MODEL FORMULATION AND DEVELOPMENT

Figure 1 shows control surface of the tube model which comprises of evaporator tube of length L with inner and outer diameters of d_i and d_0 respectively, and a two-phase refrigerant with properties indicated.

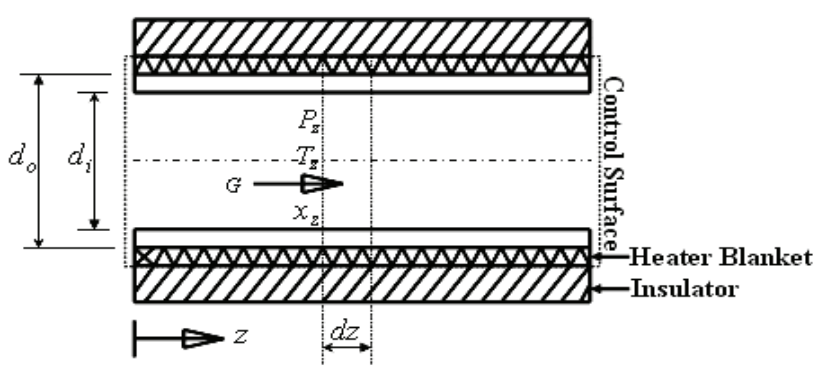

Figure 1: The Tube Model

A steady two-phase fluid-flow of mass flux G enters the evaporator with known thermodynamic state, defined by P_z, T_z, x_z and h_z. The tube is subject to uniform heat flux on its outer surface and its outer surface is assumed

to be thermally insulated and considered adiabatic. In addition, it is assumed that fluid flow is annular and equilibrium exits between the liquid and vapor components at local states. Also, axial conduction along the evaporator tube is assumed negligible.

Considering the assumptions made above and applying the separated fluid model to Figure 1, the governing equations are represented by the continuity equation (1), momentum equation (2) and the energy equation (3) (Wallis 1969).

$$G = \rho_f u_f \frac{1-\alpha}{1-x} = \rho_g u_g \frac{\alpha}{x} = \text{Constant} \tag{1}$$

$$\frac{-dP}{dz} = \frac{4\tau_w}{d_i} + G\frac{d\left[xu_g + (1-x)u_f\right]}{dz} + \left[\alpha\rho_g + (1-\alpha)\rho_f\right]g\cos\theta \tag{2}$$

$$\left(\frac{dq}{dz} - \frac{dw}{dz}\right) = GA\frac{d\left[xh_g + (1-x)h_f\right]}{dz} + GA\frac{d\left[\frac{xu_g^2}{2} + (1-x)\frac{u_f^2}{2}\right]}{dz} + GA\left(g\cos\theta\right) \tag{3}$$

Substituting for velocities u_f and u_g in equations (2) and (3) and assuming that the tube is horizontal results in equations (4) and (5).

$$\frac{-dP}{dz} = \frac{4\tau_w}{d_i} + G^2\frac{d\left[\frac{x^2}{\rho_g\alpha} + \frac{(1-x)^2}{\rho_f(1-\alpha)}\right]}{dz} \tag{4}$$

$$\frac{dq}{dz} = GA\frac{d\left[xh_g + (1-x)h_f\right]}{dz} + GA\frac{d\left[x\frac{G^2x^2}{2\rho_g^2\alpha^2} + (1-x)\frac{G^2(1-x)^2}{2\rho_f^2(1-\alpha)^2}\right]}{dz} \tag{5}$$

The void α is a function of slip ratio, vapor quality and fluid component densities and is represented using equation (6) (Whalley 1996). Similarly, the shear stress which represents frictional pressure gradient is shown in equation (7).

$$\alpha = \frac{1}{1 + \left[1 - x\left(1 - \frac{\rho_f}{\rho_g}\right)\right]^{0.5}\left[\frac{1-x}{x}\left(\frac{\rho_g}{\rho_f}\right)\right]} \tag{6}$$

$$\frac{-4\tau_w}{d_i} = \left(\frac{dp}{dz}\right)_F \tag{7}$$

$$\left(\frac{dP}{dz}\right)_F = 2f_{fo}\frac{G^2}{d_i\rho_f}\phi_{fo}^2 \tag{8}$$

The Friedel correlation (Friedel 1979) is used in evaluating the two-phase multiplier, ϕ_{fo}^2. The choice of Friedel correlation is based on Sawalha and Palm (2003) who reported that the Friedel correlation when compared to other correlations gives better prediction. Equation (9) is used in evaluating the single-phase frictional factor.

$$f_{fo} = \frac{0.079}{\mathrm{Re}_{fo}^{0.25}} \tag{9}$$

where Re_{fo} is defined as:

$$\mathrm{Re}_{fo} = \frac{Gd_i}{\mu_f} \tag{10}$$

The wall temperature profile is obtained in the heat transfer equation shown in equation (11).

$$qd_o = h_{TC,z} d_i \left(T_{w,in} - T_z\right) \tag{11}$$

The flow-boiling heat transfer coefficient at local position $h_{TC,z}$ is evaluated using Gungor-Winterton correlation (Gungor and Winterton 1986). The choice of Gungor-Winterton forced convection correlation was based on work by Yun and Choi (Yun et al 2003; Choi et al 2007) in which different correlations were compared for flow-boiling heat transfer coefficient of common refrigerants and it was found that Gungor-Winterton forced convection correlation gives relatively good prediction with an overall mean deviation of about 20% or less for mass flux greater than 400kg/m^{2}s.

4. SOLUTION METHOD

The boundary conditions applied include the fluid properties at the entrance of the evaporator tube (i.e., at node z) and they include inlet saturation temperature, refrigerant pressure, inlet quality and mass flux; as well as heat flux at tube exterior. Closer examination of the governing equations (equations (4) and (5)) reveals that there are at node, $z+1$, seven unknowns, that is, $x, \alpha, \rho_f, \rho_g, P, h_f$ and h_g. Thus, the equations are not solvable since there are seven unknowns and two equations. Even though enthalpies and densities are functions of pressure, their values at $z+1$ are only known if pressure or temperature at $z+1$ is known. With the introduction of equation (6) which relates α to x, the number of equations is increased to three, still the system of equations is not solvable since it is not yet balanced. To overcome this issue, state equations are utilized. These state equations are in the form of second-order polynomials which can easily be manipulated with sufficient accuracy (Shiming 2000). For R22 refrigerant for $400KPa \le P \le 2MPa$ the state equations are developed and shown in equations (12a), (13a), (14a) and (15a) (Shiming 2000).

$$h_f(P) = 164528 + 7.64061\times10^{-2} P - 1.32098\times10^{-8} P^2 \tag{12a}$$

$$h_g(P) = 393752 + 2.54361\times10^{-2} P - 6.83482\times10^{-9} P^2 \tag{13a}$$

$$\rho_f(P) = 1383.54 - 2.17211\times10^{-4} P + 3.20982\times10^{-11} P^2 \tag{14a}$$

$$\rho_g(P) = 1.8186 + 3.73711\times10^{-5} P + 3.05536\times10^{-12} P^2 \tag{15a}$$

For R744 $(2MPa \le P \le 6MPa)$, the state equations are given in equations (12b), (13b), (14b) and (15b).

$$h_f(P) = 91428.1 + 3.45644\times10^{-2} P - 1.02346\times10^{-9} P^2 \tag{12b}$$

$$h_g(P) = 431578 + 6.12726\times10^{-3} P - 1.79532\times10^{-9} P^2 \tag{13b}$$

$$\rho_f(P) = 1151.82 - 6.05347\times10^{-5} P - 9.7316\times10^{-13} P^2 \tag{14b}$$

$$\rho_g(P) = 24.3402 + 6.7705\times10^{-6} P + 4.00277\times10^{-12} P^2 \tag{15b}$$

Considering state equations (Equations 12-15) together with equations (4), (5), (6), the system of equations becomes balanced and was solved using Newton-Raphson finite difference iteration method. After iterations in first cell, pressure and fluid properties are obtained. Calculated fluid properties are compared with properties from REFPROP 7 (NIST 20002) and values updated. The obtained values of saturated liquid and vapor densities, and enthalpies were used as input to the next fluid cell and the routine repeated. The iteration is terminated when the error (tolerance) is less than 0.001.

5. MODEL VALIDATION

The model is validated using experimental database and predictions presented by Sripattrapan and Wongwises (2005). In order to establish a benchmark for validating the model using Sripattrapan and Wongwises (2005) data, simulations were performed using the conditions utilized by Sripattrapan and Wongwises (2005). The conditions are included in the Figures 2a and 2b.

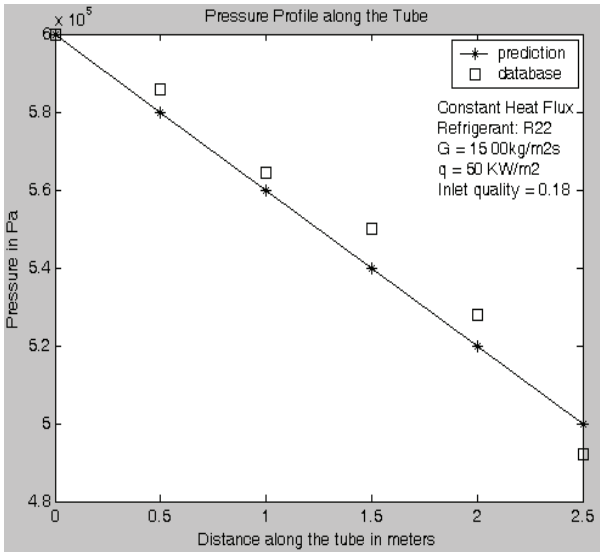

Figure 2a: Pressure distribution along tube length

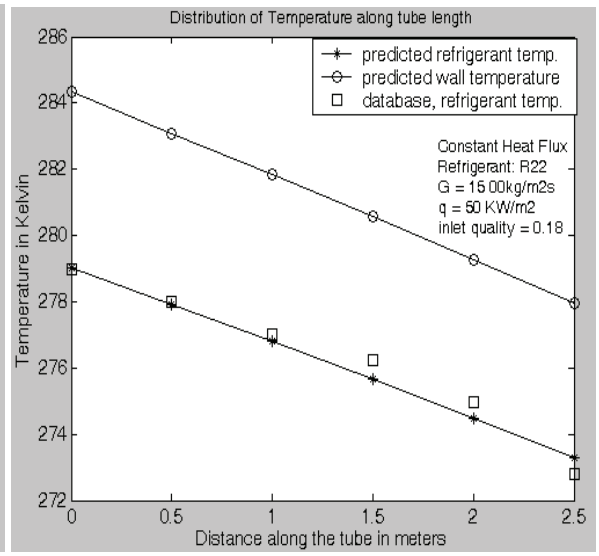

Figure 2b: Temperature distribution along tube length

Figure 2a shows the comparison between the predicted and experimental results (Sripattrapan and Wongwises 2005) for pressure variation along the tube where R22 was used as a refrigerant with inner tube diameter of 4mm. Figure 2b shows the distribution of refrigerant temperature and wall temperature along the flow path with inner tube diameter of 4mm. Owing to friction and acceleration effects, it can be seen in Figure 2a that the refrigerant pressure decreases along the flow path. The mean deviation of predicted result from database results was calculated as 1.4% in Figure 2a.

6. ENTROPY GENERATION AND OPTIMIZATION

For a two-phase mixture in equilibrium, Gibbs equation for separated fluid model is given in equation (16) (Wallis 1969).

$$Td\left[xs_g + (1-x)s_f\right] = d\left[xh_g + (1-x)h_f\right] - \left(\frac{x}{\rho_g} + \frac{1-x}{\rho_f}\right)dP \tag{16}$$

Since specific entropy associated with transfer of matter and wall temperature variation can be determined using the model, equation (17) is used to evaluate the total entropy generation rate. The use of equation (17) simplifies the analysis and eliminates the complexity associated with equation (16).

$$S_{gen} = \dot{m}\left(s_{out} - s_{in}\right) - \frac{Q}{T_w} \tag{17}$$

The value of T_w used in equation (17) is the average wall temperature of the tube. The overall aim of the optimization is to apply the concept of entropy generation minimization technique in determining the optimum tube dimensions for an evaporator tube subject to pressure drop and volume constraints. Analysis was conducted using CO_2 refrigerant for heat load of 640W and flow inlet conditions of 400kg/m^{2}s (mass flux), 0.1(vapor quality), and 10°C (inlet saturation temperature). Figure 3a shows the entropy generation rate for varying channel tube lengths for

constant diameter ratio of 0.75 (with d_i = 6mm, d_o = 8mm) while Figure 3b shows the variation with inner tube diameter for a constant tube length of 2m.

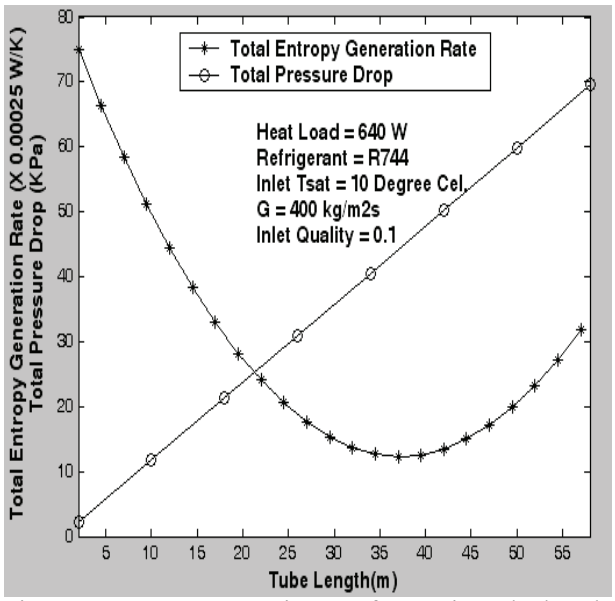

Figure 3a: Entropy generation rate for varying tube length

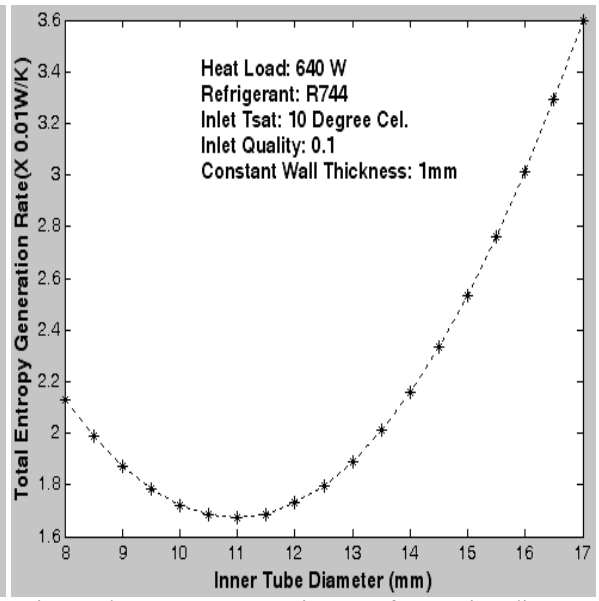

Figure 3b: Entropy generation rate for varying diameter

In figure 3a, for the condition specified, minimum entropy would be generated when tube length of about 35m is used. The decrease in total entropy generation rate with increasing tube length occurred up to tube length of 35m. Within this region (that is, tube lengths below 35m), entropy generation due to loss in pressure is negligibly small compared to that due to heat transfer over a finite temperature difference. Beyond this region, the pressure drop becomes appreciable and its numerical value far exceeds the permissible total pressure drop in an evaporator tube. Consequently, the pressure drop component constitutes an appreciable part of the total entropy generation rate, leading to an increase in total entropy generated. For the operating condition considered, tube length of 35m would appear to be the optimum tube length. However, using an evaporator tube of length of 35m even when made in the form of parallel circuits gives not only a high pressure loss problem (when compared to lower tube lengths), but also economic, insulation and space problems. It therefore implies that the optimum tube length (considering design and economic constraints) may not necessary be the tube length that gives the lowest value for entropy generation rate. Similarly, in Figure 3b, the wall thickness was constant at 1mm and minimum entropy generation occurred when inner diameter was 11mm and outer 13mm (diameter ratio of 0.846). Again, this may not be the optimum dimensions considering constraints mentioned earlier and commercial availability of the tube. In order to determine the optimum tube dimensions for the single tube evaporator, two constraints are introduced. One is the pressure drop constraint and the other is volume constraint. On pressure drop constraint, the total pressure drop should not exceed 34.47KPa (5psi). This value is used as benchmark because from technical data and tests, a typical refrigeration duty evaporator is designed so that the highest possible pressure drop does not exceed 34.47KPa (5psi) (DuPont, 2002). The term volume as used in this context refers to the flow path volume which is the product of flow cross-sectional area and tube length. Furthermore, since tubes are commercially available at only nominal diameters and wall thickness, it is preferable to take (d_o / d_i) = 1.2 (Bejan et al 1996). Since nominal pipe size (NPS) of 14 is extremely above the tube limit of our consideration, nominal diameter used in this context therefore refers to inner tube diameter. With the ratio above, it implies that the diameter ratio (d_i / d_o) should be 0.833. Possible available diameter combinations and their respective entropy generation rates, pressure drops and flow cross-section volume are presented in Table 1 below.

Table 1: Tube Parameter Analysis for Optimum Tube Determination

Inner Diameter (mm)	Outer Diameter (mm)	Diameter Ratio	Possible Tube Length (m)	Entropy Generation Rate (W/K)	Pressure Drop (KPa)	Flow Section Volume (x $10^{-6}m^3$)
5	6	0.833	2.0	0.0198	4.970	39.275
			2.5	0.0168	6.320	49.087
			3.0	0.0148	7.680	58.905
10	12	0.833	2.0	0.0188	0.210	0.000157
			2.5	0.0158	0.270	0.000196
			3.0	0.0138	0.330	0.000236
15	18	0.833	2.0	0.0325	0.033	0.0003534
			2.5	0.0283	0.043	0.0004418
			3.0	0.0253	0.052	0.0005301

From Table 1, it would be seen that the combination of inner tube diameter 10mm, outer tube diameter 12mm and tube length 3m give lowest entropy generation rate, low pressure drop and less volume. Although some dimensions, for instance, shorter tubes for a given inner tube diameter give lower pressure drop (see Table 1), the increase in entropy generation rate is quite considerable (see Figure 3a) and outweighs the benefits gained from reduced pressure drop, and volume. Tube dimension of inner diameter 5mm, outer diameter 6mm and length 3m would also give considerable result since the pressure drop is far below the permissible maximum pressure drop. However care should be taken in using such tube dimensions in a high pressure system in order not to exceed the mechanical strength of the tube. Also, temperature profile on tube with inner and outer diameters of 5mm and 6mm respectively is not as uniform as that with inner and outer diameters of 10mm and 12mm respectively. Considering all the constraints, the optimum tube dimensions for the heat load and conditions used in the analysis were determined as 10mm inner diameter, 12mm outer diameter and length 3m.

7. CONCLUSIONS

Thermo-hydraulic analysis has been conducted using separated fluid model for a two-phase refrigerant system. The governing equations were considered and fluid-flow discretized into cells. A Newton-raphson finite difference numerical technique was employed in solving for fluid properties and heat transfer coefficient along the tube. Predicted results from the model were compared with results available in literature and were found to be in good agreement. Entropy generation analysis was also conducted and the tube optimized subject to pressure drop and volume constraints. It was shown that tube dimensions that give minimum entropy generation rate may not necessarily be the optimum tube parameter. Optimum tube parameters were obtained that satisfies all given conditions.

NOMENCLATURE

$\dot{m}$	mass flow rate	(kg/s)
G	mass flux	(kg/m^{2}s)
Q	heat transfer rate	(W)
q	heat flux	(W/m^2)
d_i	inner tube diameter	(m)
d_o	outer tube diameter	(m)
L	tube length	(m)
dz	discrete length	(m)
S_{gen}	total entropy generation rate	(W/K)
g	acceleration due to gravity	(m/s^2)
u	velocity	(m/s)
x	quality	(-)
P	pressure of refrigerant	(Pa)

Greek symbols

μ	viscosity (Pas)
ρ	density (kg/m^3)
α	void fraction (-)
τ	shear stress (N/m^2)
θ	angle with horizontal

Subscripts

f	saturated liquid
g	saturated vapor
F	friction
w	wall
in	inner
out	outer
z	axial location along tube
sat	saturation

T	temperature of refrigerant	(^oC)
A	cross sectional area	(m^2)
h	enthalpy	(J/kg)
h_{TC}	heat transfer coefficient	(W/m^2K)
Re	Reynolds number	(-)
Ja	Jacobian Matrix	

REFERENCES

Al-Zaharnah, I., 2003, Entropy analysis in pipe flow subject to external heating, Int. J. Entropy, vol. 5, p. 391-403

Bejan, A., 1982, Entropy Generation through Heat and Fluid Flow, John Wiley Publishers, New York

Bejan, A., 1982b, Second-Law analysis in heat transfer and thermal design, Adv. Heat Transfer, vol. 15, p. 1-58

Bejan, A., 1996, Entropy Generation Minimization: The Method of Thermodynamic Optimization of Finite-Size Systems and Finite-Time Processes, CRC Press, Boca Ration

Bejan, A., Tsatsaronis, G., Moran, M., 1996, Thermal Design and Optimization, John Wiley Publishers, New York

Cavallini, A., 2002, Heat transfer and energy efficiency of working fluids in mechanical refrigeration, IIR Bulletin, no. 6

Choi, K., Pamitran, A., and Oh, J., 2007, Two-phase flow heat transfer of CO2 vaporization in smooth horizontal minichannel, Int. J. Refrigeration, vol. 30, 767-777

Domanski, P., Yashar, D., Kaufman, K., Michalski, R., 2004, A optimised design of finned-tube evaporators using the learnable evoluation model, ASHRAE HVAC & Reaseach, vol. 10, no.2, p. 201-211

DuPont, 2002, Technical and Test Sheets, E.1.du Pont de Nemours and company, Canada

Friedel, L., 1979, Improved friction pressure drop correlation for horizontal and vertical two-phase pipe flow, European Two-Phase Group Meeting, Ispra, Italy

Granryd, E., 1992, Optimum circuit tube length and pressure drop on the refrigerant side of evaporators, Proc. IIR Conference, Purdue, p. 73-82

Gungor, K., and Winterton, R., 1986, A general correlation for flow boiling in tubes and annuli, Int. J. Heat Mass Transfer, vol. 29, no.3, p. 351-358

Kakac, S., and Liu, H., 2002, Heat Exchangers: Selection Rating, and Thermal Design, second edition, CRC Press, Boca Raton

Khan, W., 2007, Optimial design of tube banks in crossflow using entropy generation minimization method, Int. J. Thermophysics and Heat transfer, vol. 21, no. 2, p.372-378

NIST, National institute of Standard and Technology, 2002, Standard Reference Data, Gaithersburg

Ratts, E., 2004, Entropy generation minimization of fully developed internal flow with constant heat flux, Int. J. Heat Transfer, vol. 126, p. 656-659

Sahin, A., 2002, Entropy generation and pumping power in a turbulent flow through a smooth pipe subject to constant heat flux, Int. J. Exergy, vol. 2, 322-329

Sawalha, S., and Palm, B., 2003, Energy consumption evaluation of indirect systems with CO_2 as secondary refrigerant in supermarket refrigeration, Proc. IIR Conference, Washington DC

Shiming, D., 2000, A dynamic mathematical model of a direct expansion (DX) water-cooled air conditioning plant, Int. J. Building and Environment, vol. 35, p.603-613

Shiba, T., and Bejan, A., 2001, A thermodynamic optimisation of geometric structure in the counter-flow heat exchanger for an environmental control system, Int. J. Energy, vol. 26, p.495-511

Sripattrapan, W., and Wongwises, S., 2005, Two-phase flow of refrigerants during evaporation under constant heat flux in a horizontal tube, J. International Commuminications in Heat and Mass Transfer, vol. 32, p. 386-402

Wallis, G., 1969, One-dimensional Two-phase flow, McGraw-Hill Publishers, New York

Whalley, P., 1996, Two-Phase Flow and Heat Transfer, Oxford University Press, Oxford

Yun, R., Kim., Y., Kim, S., and Choi, Y., 2003, Boiling heat transfer and dry-out phenomenon of CO_2 in a horizontal smooth tube, Int. J. Heat and Mass Transfer, vol.46, p. 2353-2361

ACKNOWLEDGEMENT

This study is sponsored by UCD Ad Astra Research. Dr. Sam Dolan of UCD School of Mathematics is also acknowledged.