Purdue University
Purdue e-Pubs

International Refrigeration and Air Conditioning Conference

School of Mechanical Engineering

2008

Energy and Exergy Analysis of a Micro Compressed Air Energy Storage and Air Cycle Heating and Cooling System

Youngmin Kim
Korea Institute of Machinery & Materials

Daniel Favrat
Ecole Polytechnique Federale de Lausanne

Follow this and additional works at: http://docs.lib.purdue.edu/iracc

Kim, Youngmin and Favrat, Daniel, "Energy and Exergy Analysis of a Micro Compressed Air Energy Storage and Air Cycle Heating and Cooling System" (2008). *International Refrigeration and Air Conditioning Conference.* Paper 950.
http://docs.lib.purdue.edu/iracc/950

This document has been made available through Purdue e-Pubs, a service of the Purdue University Libraries. Please contact epubs@purdue.edu for additional information.
Complete proceedings may be acquired in print and on CD-ROM directly from the Ray W. Herrick Laboratories at https://engineering.purdue.edu/Herrick/Events/orderlit.html

Energy and Exergy Anaysis of a Micro Compressed Air Energy Storage and Air Cycle Heating and Cooling System

Youngmin KIM[1], Daniel FAVRAT[2]*

[1]Korea Institute of Machinery & Materials (KIMM), ECO Machinery Division, Daejeon, Korea
ymkim@kimm.re.kr

[2]Swiss Federal Institute of Technology of Lausanne (EPFL), Industrial Energy Systems Laboratory, Lausanne, Switzerland
daniel.favrat@epfl.ch

*Corresponding Author

ABSTRACT

Energy storage systems are becoming more important for load leveling, especially for widespread use of intermittent renewable energy. Compressed air energy storage (CAES) is one of the promising methods for energy storage, but large scale CAES are dependent on the suitable underground geology. Micro-CAES with man-made air vessel is a more adaptable solution for distributed future power networks. In this paper, energy and exergy analyses of the micro-CAES system are performed and to improve the efficiency of the system, some innovative ideas are introduced. The results shows that micro-CAES system could be a very effective system for distributed power networks as a combination of energy storage, generation with various heat sources, and air-cycle heating and cooling system, with a fairly good energy density and efficiency. Quasi-isothermal compression and expansion concepts result in the best exergy efficiencies.

1. INTRODUCTION

Interest in energy storage is now increasing, especially for matching intermittent renewable energy with customer demand as well as storing excess nuclear or thermal power during the daily cycle. Compressed air energy storage (CAES) is one of the promising methods for energy storage, with high efficiency and environmental friendliness. But the large scale CAES is dependent on the right combination of sites for air storage. Micro-CAES with man-made air vessel is a more adaptable solution, especially for distributed generation that could be widely applicable to future power networks.

In the case of the micro-CAES, it is possible to use the dissipated heat of compression for residential heating, which can contribute to improvements in the energy efficiencies. In addition, compressed air systems can be used for both power generation and cooling load. Energy and exergy analyses are performed to investigate the performances of several types of micro-CAES systems. In addition, to increase the efficiency of the systems, some innovative ideas, including new constant-pressure air storage, are introduced.

2. SYSTEM DESCRIPTION

2.1 Constant Pressure Air Storage

In general, both charging and discharging of the high-pressure vessel are unsteady state processes, where the pressure ratios are changing. These varying conditions can result in low efficiencies of compression and expansion due to the deviation from the designed points. In the case of the large scale of CAES plant, it is needed to either increase the volume of cavern to limit pressure variations, or, as shown in Fig 1, to utilise water column to maintain a constant pressure in the cavern, where water from a surface reservoir displaces the compressed air.

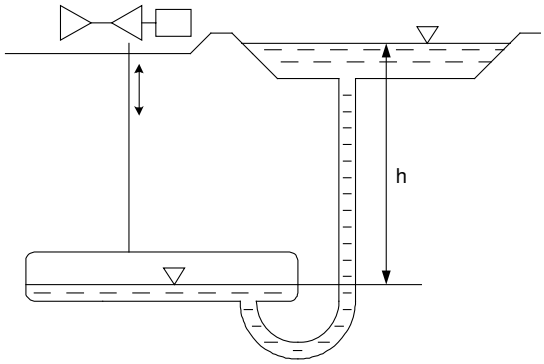

Figure 1: Constant-pressure air storage cavern with water column

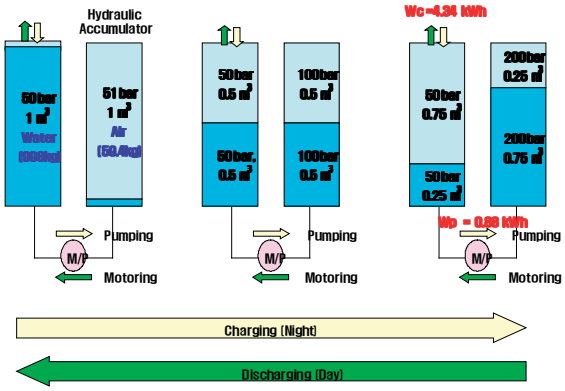

Fig 2: Constant-pressure air-storage combined with hydraulic energy storage for micro-CAES system

But, in the case of micro-CAES with shallow depth of air vessel, it is impossible to produce such big pressure difference by water column. So urban CAES providing constant air pressure by pump instead of water column is proposed. But the disadvantage of the system is that the pump consumes about 15% of the generated power. In this paper, a new constant-pressure air storage is proposed to overcome the foregoing disadvantage. It is the combination of a constant-pressure air storage and a hydraulic energy storage, as shown in Fig 2. In the following analyses of the micro-CAES systems, it is assumed that the pressure ratios of compression and expansion are not changing due to this kind of constant-pressure air storage.

2.2 Configuration of the Studied System

It is possible to build several different types of micro-CAES system according to compression and expansion processes. In the case of the large-scale CAES plants, in order to increase the overall efficiency of the system, it is customary to perform multi-stage compression with intercooling and multi-stage expansion with reheating. But in the case of the micro-CAES system, it is very important to simplify the structure as much as possible while achieving a system with high efficiency. In order to increase the efficiency of the system, isothermal compression/expansion (Ericsson cycle) is more desirable than adiabatic processes (Brayton cycle). To achieve the quasi-isothermal compression, a large amount of atomized water is injected during the compression stroke to absorb the heat in Isoengine by Linnemann, C. and Coney, M.W. (2005) and liquid flooded compressor and expander was proposed in Ericsson cycle cooler by Hugenroth et al. (2006). The water (or liquid) is discharged together with the compressed air, separated, cooled and recirculated. The energy of pressurized water can be recovered through a hydraulic motor to reduce energy consumption. The compressed air is cooled to ambient temperature through a cooler by water and stored in vessels. The hot water separated after compression and from the cooler can be used to satisfy a heating load.

Although in the process of expansion of CAES system, a heater (or combustor) to heat the compressed air is often implemented to get a higher power, it is not indispensable. If there is no heater before the expander, the expanding air can be used to supply a cooling load as in an air-cycle cooling system. In that case, to achieve quasi-isothermal expansion, as in the compression process, liquid can be injected into the expander, separated, used to supply a cooling load and pressurized by a pump for injection.

In the case of systems with a heater to preheat the expanding air, external heating of the expander or injection of hot liquid such as thermal oil can be used for achieving quasi-isothermal expansion and the expanded hot air transfers its heat to the compressed cool air in a recuperator as shown in Figure 5. To achieve the quasi-isothermal expansion, a heated scroll expander was proposed by Y. M. Kim et al. (2005), since the scroll expander can be fairly suitable for effective heating due to the high area-to-volume ratio of scroll geometry and its easy handling of two phase flow.

This study deals with the energetic and exergetic performance evaluation of eight types of micro-CAES systems according to the compression and expansion processes as mentioned above, and summarized in Table 1.

Table 1: Types of micro-CAES system according to the compression and expansion processes.

Type	Compression & Expansion	Number of Stage	Fuel
1	Adiabatic	1	NO
2	Quasi-Isothermal	1	NO
3	Adiabatic	2	NO
4	Quasi-Isothermal	2	NO
5	Adiabatic	1	YES
6	Quasi-Isothermal	1	YES
7	Adiabatic	2	YES
8	Quasi-Isothermal	2	YES

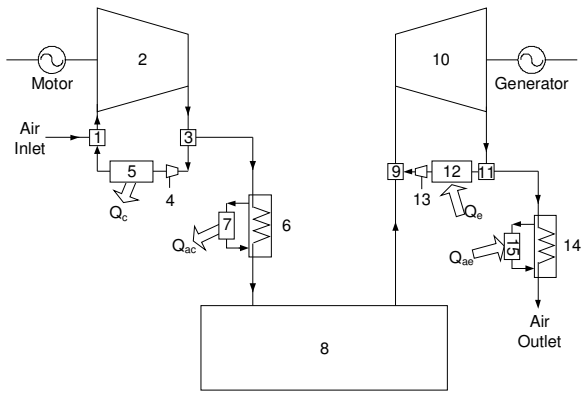

Fig 3: Micro-CAES system (Type 1, 2)
(1) mixer, (2) compressor, (3) separator, (4) hydraulic motor, (5), (6) and (7) heat exchanger, (8) high pressure vessel, (9) mixer, (10) expander, (11) separator, (13) pump, (12), (14) and (15) heat exchanger.

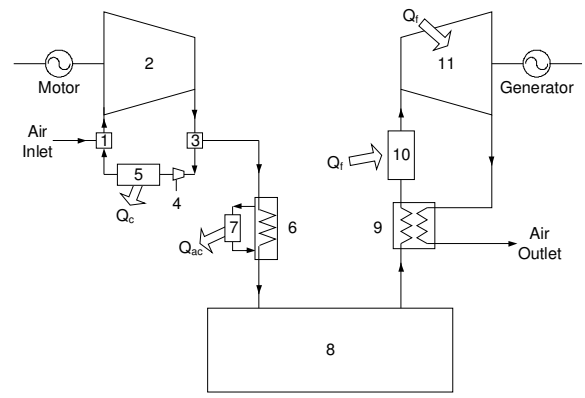

Fig 5: Micro-CAES system (Type 5, 6)
(1) mixer, (2) compressor, (3) separator, (4) hydraulic motor, (5), (6) and (7) heat exchanger, (8) high pressure vessel, (9) recuperator, (10) heater, (11) expander.

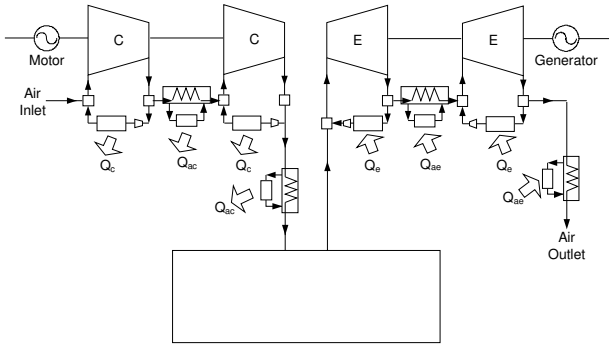

Fig 4: Micro-CAES system (Type 3, 4)

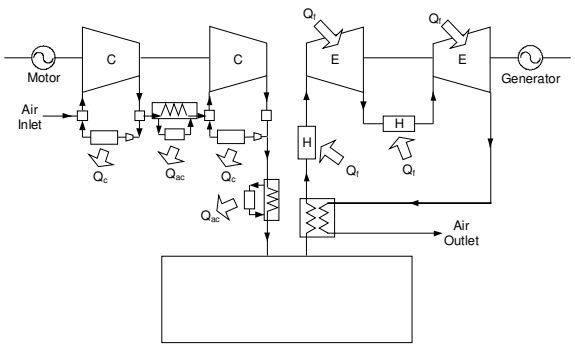

Fig 6: Micro-CAES system (Type 7, 8)

3. ENERGY AND EXERGY ANALYSES

In order to study the energy and exergy analyses of the eight systems, several assumptions and inlet data are adopted as follows.
(a) Each compression and expansion process is assumed at steady state and with a steady flow by adoption of a constant-pressure air storage, with negligible potential and kinematic energy effects and no chemical or nuclear reaction.
(b) For the quasi-isothermal compression and expansion processes, it is assumed that the methods of liquid injection or the external heating using fuel, mentioned above, are used.
(c) For simplicity, all the heat exchangers, except for the recuperator ($\varepsilon_R = 0.95$), including the cooler and heater are assumed to be ideally perfect, with $\varepsilon = 1.0$ and no pressure drop (ε, effectiveness of heat exchanger).
(d) The air pressure in the storage vessel is assumed to be constantly 5MPa by adoption of a constant-pressure air storage. The designed pressure ratios of the compressor and expander are 50, with the isentropic efficiencies of 85%.

3.1 Compressor and Expander Model

For the analyses of compression and expansion of gas containing liquid, the liquid flooded compressor and expander model by Hugenroth et al. (2006) was adopted.
An ideal gas with a constant heat ratio of k that is undergoing a compression process in thermal equilibrium with an incompressible liquid having a constant specific heat behaves exactly like an ideal gas having a constant specific heat equal to k^*. The effective ratio of specific heat of the mixture is

$$k^* = \frac{m_g c_{p,g} + m_l c_l}{m_g c_{v,g} + m_l c_l} \tag{1}$$

The temperature change for the gas during a reversible flooded compression process is found by substituting k^* for k in the conventional isentropic relations for ideal gases, resulting in

$$\frac{T_{o,ideal}}{T_i} = P_{ratio}^{\frac{k^*-1}{k^*}} \tag{2}$$

where $T_{o,ideal}$ is the ideal outlet temperature for a flooded compressor or expander.
The reversible work of the cooled ideal gas is the same as that for adiabatic reversible work of an ideal gas with k^* substituted for k. The result is

$$w_g = \frac{RT_i k^*}{k^* - 1}\left[P_{ratio}^{\frac{k^*-1}{k^*}} - 1\right] \tag{3}$$

where w_g is the specific reversible work required to compress the gas that is in thermal equilibrium with a liquid and P_{ratio} is the ratio of P_o to P_i.
The reversible work required to pump the incompressible liquid, neglecting the relatively small impact of temperature changes on specific volume of the liquid, is

$$w_l = v(P_o - P_i) \tag{4}$$

The total reversible compressor power is

$$\dot{W}_{ideal} = \dot{m}_g w_g + \dot{m}_l w_l \tag{5}$$

The actual compressor and expander powers for the gas and liquid mixture are determined using an isentropic efficiency defined as, respectively

$$\eta_c \equiv \frac{\dot{W}_{ideal}}{\dot{W}_{actual}} \tag{6}$$

$$\eta_e \equiv \frac{\dot{W}_{actual}}{\dot{W}_{ideal}} \tag{7}$$

3.2 Energy Efficiencies

CAES system uses inputs in the form of electricity and in the form of fuel or other heat sources to heat the compressed air. In the case of micro-CAES system, it is possible to use the dissipated heat of compression for local heating demand and the cooling effect of expanding air without any fuel use for cooling demand. So, it is possible to define several efficiencies for the purposes in the system.

In general, it is possible to calculate the net electrical storage efficiency of the CAES system by subtracting the amount of energy "generated" by the natural gas (or other fuels) from the electric output of the CAES system, as follows

$$\eta_s \equiv \frac{E_{out} - Q\eta_p}{E_{in}} \tag{8}$$

Where $Q\eta_p$ is the electric energy which would be produced if the corresponding fuel consumed in CAES is burned in another power station (Q is the lower calorific value of the fuel and η_p is the efficiency of the base-load charging plant), and $\eta_p = 0.40$, a thermal efficiency of the conventional power plant, is adopted.

The heating performance of CAES system with the dissipated heat of compression can be defined as

$$\eta_H \equiv \frac{Q_{hc}}{E_{in}} = \frac{Q_c + Q_{ac}}{E_{in}} \tag{9}$$

Where Q_{hc} is the total dissipated heat of compression, which is the sum of Q_c during compression and Q_{ac} after compression.

The cooling performance, heat extraction from the ambient air, of CAES system by the expanding air, without any fuel use, can be defined as

$$\eta_C \equiv \frac{Q_{ce}}{E_{in}} = \frac{Q_e + Q_{ae}}{E_{in}} \tag{10}$$

Where Q_{ce} is the total heat extraction from the ambient air, which is the sum of Q_e during expansion and Q_{ae} after expansion.

Although the operation of the CAES system with use of fuel is different from the conventional gas turbine (or other engines), for the comparison, the similar overall thermal efficiency can be defined as,

$$\eta_{th} \equiv \frac{E_{out} - E_{in}}{Q} \tag{11}$$

3.3 Exergy Analyses

The general exergy balance can be expressed in the rate form as

$$\dot{E}^+ - \dot{E}^- = \dot{L} \tag{12}$$

where $\dot{E}^+$ is the rate of exergy transfer to the system by heat, work, and mass, $\dot{E}^-$ is the rate of exergy transfer from the system, and $\dot{L}$ is the rate of exergy destruction.

The exergy transfer to the system by heat, $\dot{E}_q{}^+$, can be defined as

$$\dot{E}_q{}^+ \equiv \int \left(1 - \frac{T_0}{T}\right) \delta\dot{Q}^+ \tag{13}$$

The exergy transfer to the system by mass flow, $\dot{E}_y{}^+$, can be defined as

$$\begin{aligned} \dot{E}_{yk}{}^+ &\equiv \dot{M}_k (k_{in} - k_{out}) \\ &= \dot{M}_k \left[(h_{in} - h_{out}) - T_0 (s_{in} - s_{out}) \right] \end{aligned} \tag{14}$$

In the case of gas flow,

$$h_{in} - h_{out} = c_p (T_{in} - T_{out}) \tag{15}$$

$$s_{in} - s_{out} = c_p \ln \frac{T_{in}}{T_{out}} - r \ln \frac{P_{in}}{P_{out}} \tag{16}$$

where r is the specific gas constant.

In the case of liquid flow, neglecting volumetric change ($dv \cong 0$)

$$h_{in} - h_{out} = c(T_{in} - T_{out}) + \frac{P_{in} - P_{out}}{\tilde{\rho}} \tag{17}$$

$$s_{in} - s_{out} = c \ln \frac{T_{in}}{T_{out}} \tag{18}$$

where c is the specific heat, $\tilde{\rho}$ is the average density of the liquid.

The exergy transfer from the system by mass flow, $\dot{E}_y^{\,-}$, can be defined as

$$\begin{aligned} \dot{E}_{yk}^{\,-} &\equiv \dot{M}_k (k_{out} - k_{in}) = -\dot{E}_{yk}^{\,+} \\ &= \dot{M}_k \left[(h_{out} - h_{in}) - T_0 (s_{out} - s_{in}) \right] \end{aligned} \tag{19}$$

In the case of the compression process of the gas and liquid mixture, the exergy balance is as follow

$$\dot{L}_c = \dot{E}^+ - \dot{E}^- \tag{20}$$

$$\dot{E}^+ = \dot{E}_c^{\,+} \tag{21}$$

$$\dot{E}^- = \dot{E}_{ya}^{\,-} + \dot{E}_{yl}^{\,-} \tag{22}$$

where $\dot{E}_c^{\,+}$ is the exergy transfer to the system by compression work, $\dot{E}_{ya}^{\,-}$ is the exergy transfer from the system by air flow, and $\dot{E}_{yl}^{\,-}$ is the exergy transfer from the system by liquid flow.

The exergy efficiency (Second Law efficiency) of the compressor can be defined as

$$\eta_{\mathrm{II},c} \equiv \frac{\dot{E}^-}{\dot{E}^+} = \frac{\dot{E}_{ya}^{\,-} + \dot{E}_{yl}^{\,-}}{\dot{E}_c^+} \tag{23}$$

After the compression of the air, it is cooled to the storage temperature through an after-cooler. The heat balance in the after-cooler is as follows

$$\begin{aligned} \dot{Q}_{ac} &= \dot{M}_a c_p (T_{in,a} - T_{out,a}) \\ &= \dot{M}_l c_l (T_{out,l} - T_{in,l}) \end{aligned} \tag{24}$$

Once the mass flow rate of air, and inlet, outlet temperatures are known, Equation (24) can be used to determine the required mass flow rate of cooling water.

The general exergy balance in the after-cooler can be expressed in the rate form as

$$\dot{L}_{ac} = \dot{E}_{ya}^{\,+} - \dot{E}_{yl}^{\,-} \tag{25}$$

The exergy efficiency of the after-cooler can be defined as

$$\eta_{\mathrm{II},ac} \equiv \frac{\dot{E}_{yl}^{\,-}}{\dot{E}_{ya}^{\,+}} \tag{26}$$

In the case of the expansion process of the gas and liquid mixture without any fuel use, the result is as follow

$$\dot{L}_e = \dot{E}^+ - \dot{E}^- \tag{27}$$

$$\dot{E}^+ = \dot{E}_{ya}^{\,+} + \dot{E}_{yl}^{\,+} \tag{28}$$

$$\dot{E}^- = \dot{E}_e^{\,-} \tag{29}$$

where $\dot{E}_e^{\,-}$ is the exergy transfer from the system by expansion work, $\dot{E}_{ya}^{\,+}$ is the exergy transfer to the system by air flow, and $\dot{E}_{yl}^{\,+}$ is the exergy transfer to the system by liquid flow.

The exergy efficiency (Second Law efficiency) of the expander can be defined as

$$\eta_{\mathrm{II},e} \equiv \frac{\dot{E}^-}{\dot{E}^+} = \frac{\dot{E}_e^{\,-}}{\dot{E}_{ya}^{\,+} + \dot{E}_{yl}^{\,+}} \tag{30}$$

In the case of CAES system without any fuel use (or other heat source), given the only input as compression work, it is possible to use the expansion work ($\dot{E}_e^{\,-}$), the hot liquid by cooling the heat of compression during compression

($\dot{E}_{yl.c}^{-}$) and after compression ($\dot{E}_{yl.ac}^{-}$), the cooling liquid by cooling effect of expanding air during expansion ($\dot{E}_{yl.e}^{-}$) and after expansion ($\dot{E}_{yl.ae}^{-}$) as outputs. The exergy efficiency of the overall CAES system can be defined as

$$\eta_{\mathrm{II},CAES} \equiv \frac{\dot{E}^{-}}{\dot{E}^{+}} = \frac{\dot{E}_{e}^{-} + \dot{E}_{yl.c}^{-} + \dot{E}_{yl.ac}^{-} + \dot{E}_{yl.e}^{-} + \dot{E}_{yl.ae}^{-}}{\dot{E}_{c}^{+}} \tag{31}$$

In the case of the expansion process of the gas accompanied by heating with the use of fuel, it is assumed that the compressed air is externally heated. The system includes the regeneration and preheating processes.
The exergy balance in the recuperator can be expressed in the rate form as

$$L_{reg} = \dot{E}_{ya}^{+} - \dot{E}_{ya}^{-} \tag{32}$$

where $\dot{E}_{ya}^{+}$ is the exergy transfer to the recuperator by the flow of exhaust hot air, and $\dot{E}_{ya}^{-}$ is the exergy transfer from the recuperator by the flow of the compressed air.
The exergy efficiency of the recuperator can be defined as

$$\eta_{\mathrm{II},reg} \equiv \frac{\dot{E}^{-}}{\dot{E}^{+}} = \frac{\dot{E}_{ya}^{-}}{\dot{E}_{ya}^{+}} \tag{33}$$

After the regeneration, the air is further heated through a pre-heater with use of fuel. The heat balance in the pre-heater is as follows

$$\dot{Q}_{h} = \dot{M}_{a} c_{p} (T_{out} - T_{in}) \tag{34}$$

The exergy balance in the pre-heater can be expressed in the rate form as

$$\dot{L}_{h} = \dot{E}_{f}^{+} - \dot{E}_{ya}^{-} \tag{35}$$

where $\dot{E}_{f}^{+}$ is the exergy transfer to the pre-heater by the fuel (exergy value of the fuel), and $\dot{E}_{ya}^{-}$ is the exergy transfer from the pre-heater by the flow of the compressed air.
The exergy transfer by fuel can be expressed as

$$\dot{E}_{f}^{+} = \dot{M}_{f} \underline{\Delta}k^{0} \tag{36}$$

Where $\dot{M}_{f}$ is the mass flow rate of the fuel and $\underline{\Delta}k^{0}$ is the maximum specific exergy by complete oxidation of the fuel on a mass basis.
The exergy efficiency of the pre-heater can be defined as

$$\eta_{\mathrm{II},h} \equiv \frac{\dot{E}^{-}}{\dot{E}^{+}} = \frac{\dot{E}_{ya}^{-}}{\dot{M}_{f} \underline{\Delta}k^{0}} \tag{37}$$

As mentioned before, the expansion process can be accompanied by external heating with the use of fuel for achieving a quasi-isothermal expansion process.
The exergy balance in the expander can be expressed in the rate form as

$$\dot{L}_{e} = \dot{E}_{ya}^{+} + \dot{E}_{f}^{+} - \dot{E}_{e}^{-} \tag{38}$$

where $\dot{E}_{ya}^{+}$ is the exergy transfer to the expander by the flow of hot compressed air, $\dot{E}_{f}^{+}$ is the exergy transfer to the expander by the fuel, and $\dot{E}_{e}^{-}$ is the exergy transfer from the system by expansion work.
The exergy efficiency of the expander can be defined as

$$\eta_{\mathrm{II},e} \equiv \frac{\dot{E}^{-}}{\dot{E}^{+}} = \frac{\dot{E}_{e}^{-}}{\dot{E}_{ya}^{+} + \dot{E}_{f}^{+}} \tag{39}$$

In the case of CAES system accompanied by heating with the use of fuel, given inputs as compression work and fuel, it is possible to use the expansion work ($\dot{E}_{e}^{-}$), the hot liquid energy by cooling the heat of compression during

compression ($\dot{E}_{yl.c}^{-}$) and after compression ($\dot{E}_{yl.ac}^{-}$), and by heat recovery of hot exhaust air after expansion ($\dot{E}_{yl.ae}^{-}$) as outputs. The exergy efficiency of the overall CAES system can be defined as

$$\eta_{\mathrm{II},CAES} \equiv \frac{\dot{E}^{-}}{\dot{E}^{+}} = \frac{\dot{E}_{e}^{-} + \dot{E}_{yl.c}^{-} + \dot{E}_{yl.ac}^{-} + \dot{E}_{yl.ae}^{-}}{\dot{E}_{c}^{+} + \dot{E}_{f}^{+}} \tag{40}$$

Table 2: Energy Analyses of the micro-CAES systems

TYPE	P_c, P_e (P_1/P_2)	T_c (T_i) (°C)	E_c^+	T_e (T_i) (°C)	E_e^-	η_s (%)	Q_{hc}^-	η_H (%)	Q_{ce}^+ (T_o)	η_C (%)	Q_f^+	η_{th} (%)
1	50	623 (20)	713	-177 (20)	168	23.6	606 (80°C)	85.0	198 (-177°C)	27.8	-	-
2	50	80 (20)	425	-30 (20)	255	60.0	362 (80°C)	85.0	300 (-30°C)	70.6	-	-
3	7.1 & 7.1	239 (20)	519	-106 (20)	214	41.3	441 (80°C)	85.0	252 (-106°C)	48.6	-	-
4	7.1 & 7.1	80 (20)	425	-6 (20)	267	62.8	361 (80°C)	85.0	314 (-6°C)	73.9	-	-
5	50	623 (20)	713	45 (700)	559	41.5	606 (80°C)	85.0	-	-	659	-23.3
6	50	80 (20)	425	535 (700)	847	103.0	362 (80°C)	85.0	-	-	1023	41.2
7	7.1 & 7.1	239 (20)	518	283 (700)	711	71.6	441 (80°C)	85.0	-	-	850	22.7
8	7.1 & 7.1	80 (20)	425	613 (700)	887	107.6	362 (80°C)	85.0			1073	43.0

Table 3: Exergy Analyses of the micro-CAES systems

Type	E_c^+	L_c	L_{ac}	E_e^-	L_e	L_{reg}	$E_{yf.c}^-$ ($T_{o,f}$)	$E_{yf.ac}^-$ ($T_{o,f}$)	$E_{yf.e}^-$ ($T_{o,f}$)	$E_{yf.ae}^-$ ($T_{o,f}$)	E_f^+	$\eta_{II,CAES}$ (%)
1	713	107	222	168	30	-	0	55 (80°C)	0	131 (-177°C)	-	49.6
										19 (-30°C)		34.0
2	425	58	0	255	51	-	27 (80°C)	5 (80°C)	24 (-30°C)	5 (-30°C)	-	74.4
3	519	78	72	214	38	-	0	40 (80°C)	0	77 (-106°C)	-	63.8
										24 (-30°C)		53.7
4	425	85	0	267	60	-	22 (80°C)	11 (80°C)	12 (-6°C)	2 (-6°C)	-	74.0
5	713	107	222	559	99	0.1	0	55 (80°C)	-	-	659	44.7
6	425	91	0	847	424	15	27 (80°C)	5 (80°C)	-	-	1023	60.8
7	518	78	72	711	126	6	0	40 (80°C)	-	-	850	54.9
8	425	85	0	887	431	18	22 (80°C)	11 (80°C)			1073	61.5

4. RESULTS AND DISCUSSION

The results obtained from the energy and exergy analyses are summarized in Table 2 and 3, respectively. In the course of the analyses, the additional compression work due to liquid injected for achieving quasi-isothermal

compression, $m_l w_l$, was neglected, because the work is only a few percent (~2%) of the gas compression work, $m_g w_g$, and can be recovered by a hydraulic motor. And also, as in the case of expansion, the work to pump the liquid injected for achieving quasi-isothermal expansion was neglected, because the work is only a few percent of the gas expansion work and can be recovered by the expander. It was assumed that both compression and expansion efficiencies (η_c and η_e defined in Eq. (6), (7)) are equal to 0.85.

From the energy balance, ideally, the total dissipated heat of compression before storage, Q_{hc}, is equal to the compression work irrespective of the different types of compression processes. But, if it is assumed that the cooling fluid is heated to 80°C ($T_{o,f}$ = 80°C), in the case of adiabatic compression, especially with 1 stage, the irreversibility during cooling the compressed air, L_{ac}, is very large due to a high level of temperature at the end of compression process.

Similarly, the total heat extraction from the ambient air by expanding air without any fuel use, Q_{ce}, is equal to the expansion work irrespective of the different types of expansion processes. But, in the case of adiabatic expansion, especially with 1 stage, the temperature of the air at the end of the expansion process is very low. If we do not fully utilize the low temperature of exergy, the irreversibility is very large. If we use it by heat transfer with a secondary fluid, the exergy loss is dependant on the outlet temperature of the cooled secondary fluid ($T_{o,f}$). In the case of Type 1 in Table 3, the exergy of the fluid cooled to -177°C is 131kJ/kg with no exergy loss, but to -30°C it is just only 19kJ/kg with a large exergy loss, that is similar to the case of Type 3 with 2-stages of adiabatic expansion.

In the case of CAES system with air heating to 700°C with the use of fuel, it is possible to produce more power than without any fuel use, although we can not use the cooling effect of the expanding air. In this study, the temperature of compressed air is limited to 700°C by external heating, but the rise in the temperature can lead to improvement in the energetic and exergetic performance of the system.

Figure 7 and 8 show the energy and exergy flows of the systems of Type 4 and 8, with 50bar, 1m^3 air storage, respectively, the best systems in this study, which show fairy good energy densities and efficiencies with the compressed air energy storage.

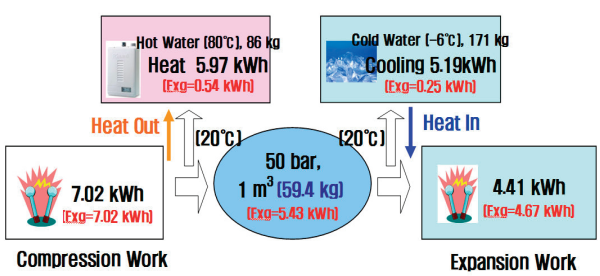

Fig 7: Energy and exergy flow of the micro-CAES system with Type 4

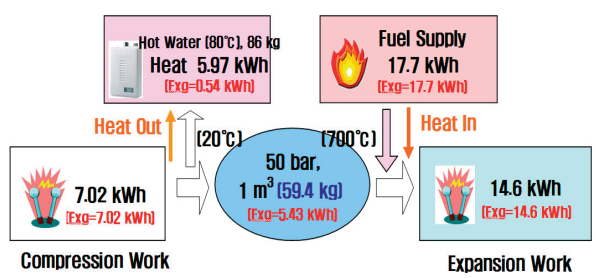

Fig 8: Energy and exergy flow of the micro-CAES system with Type 8

5. CONCLUSIONS

This study presents the results of the energy and exergy analyses of the different types of micro-CAES systems as well as some innovative ideas for the high efficiency of the system. In the micro-CAES system, it is possible to use the dissipated heat of compression for heating load and the compressed air can be used for both power generation and cooling load.

For the high efficiency of the system, quasi-isothermal compression and expansion processes (Ericsson cycle) are more desirable than adiabatic processes (Brayton cycle), especially due to the high pressure ratio of the micro-CAES

system. In the case of the systems with adiabatic processes, there are the larger exergy losses by heat transfer with the bigger temperature differences after the compression and expansion processes. But, the micro-CAES system, especially with quasi-isothermal compression and expansion processes, could be said to be very effective system for distributed power networks as a combination of energy storage, generation, and air-cycle heating and cooling system, with the fairly good energy densities and efficiencies.

NOMENCLATURE

k	specific heat ratio
k^*	effective ratio of specific heat
m	mass (kg)
c	specific heat (kJ/(kgK))
T	temperature (K)
P	pressure (kPa)
w	specific work (kJ/kg)
$\dot{W}$	rate of total work (kW)
η	efficiency (dimensionless)
Q	heat transfer (kJ)
E_{in}, E_{out}	electric power input, output (kJ)
$\dot{E}^+$	rate of exergy to the system (kW)
$\dot{E}^-$	rate of exergy from the system (kW)
$\dot{L}$	rate of exergy destruction (kW)
$\dot{M}$	mass flow rate (kg/s)
k	specific flow exergy (kJ/kg)
h	specific enthalpy (kJ/kg)
s	specific entropy (kJ/(kgK))
ρ	density (kg/m^3)

Subscripts

g	gas
l	liquid
i	inlet
o	outlet
s	storage
H	heating performance
hc	heat of compression
c	compression
ac	after compression or after-cooler
C	cooling performance
ce	cooling by expanding air
e	expansion
ae	after expansion
a	air
reg	regeneration
h	heater
f	fuel or secondary fluid
0	dead state
II	exergy (Second Law)
q	heat exergy
y	transformation exergy

REFERENCES

Borel L.,Favrat D., 2005, Thermodynamique et énergétique, Lausanne: Presses Poly-techniques Universitaires Romandes; (in the process of being translated in English with the title thermo-dynamics and energy systems analysis by EPFL Press).

Denholm, P. and Kulcinski, G.L., 2004, Life cycle energy requirements and greenhouse gas emissions from large scale energy storage systems, *Energy Conversion and Management 45* 2153-2172.

Hugenroth, J., Braun, J., Groll, E., King, G., 2006, Liquid-Flooded Ericsson Cycle Cooler: Part 1- thermodynamic Analysis, *International Refrigeration and Air Conditioning Conference at Purdue*, R168.

J. Kondoh, I. Ishii, H. Yamaguchi, A. Murata, K. Ontai, K. Sakuta, N. Higuchi, S. Sekine, M. Kamimoto, 2000, Electrical energy storage systems for energy networks, *Energy Conversion and Management 41* 1863-1874

Linnemann, C. and Coney, M.W., 2005, The isoengine: realization of a high-efficiency power cycle based on isothermal compression, *Int. J. of Energy Technology and Policy*, Vol. 3, Nos. 1/2.

Swanbarton Limited., 2004, Status of Electrical Energy Storage Systems, *DTI Report* No. 04/1878, UK.

S. Wang, G. Chen, M. Fang and Q. Wang, 2006, A new compressed air energy storage refrigeration system, *Energy Conversion and Management 47* 3408-3416.

TENI Services Limited., 2005, An appraisal of new and renewable generation technologies as transmission upgrade alternatives, *NZ Electricity Commission Report* P5NZ01.

UCC Sustainable Energy Research Group, 2004, Study of Electricity Storage Technologies and Their Potential to Address Wind Energy Intermittency in Ireland, *University College Cork Final Report* RE/HC/103/001.

Y. M. Kim, D. K. Shin, J. H. Lee, 2005, Heated scroll expander and its application for distributed power source, *International Conference on Conference on Compressors and Their Systems*, pp. 133-142.