Purdue University
Purdue e-Pubs

International Refrigeration and Air Conditioning Conference

School of Mechanical Engineering

2008

Simulation and Validation of a R404A/CO2 Cascade Refrigeration System

Jonathan Michael Winkler
University of Maryland

Vikrant Aute
University of Maryland

Reinhard Radermacher
University of Maryland

Doron Shapiro
Ingersoll-Rand Climate Control

Follow this and additional works at: http://docs.lib.purdue.edu/iracc

Winkler, Jonathan Michael; Aute, Vikrant; Radermacher, Reinhard; and Shapiro, Doron, "Simulation and Validation of a R404A/CO2 Cascade Refrigeration System" (2008). *International Refrigeration and Air Conditioning Conference.* Paper 942.
http://docs.lib.purdue.edu/iracc/942

This document has been made available through Purdue e-Pubs, a service of the Purdue University Libraries. Please contact epubs@purdue.edu for additional information.
Complete proceedings may be acquired in print and on CD-ROM directly from the Ray W. Herrick Laboratories at https://engineering.purdue.edu/Herrick/Events/orderlit.html

Simulation and Validation of a R404A/CO_2 Cascade Refrigeration System

Jon WINKLER[1,*], Vikrant AUTE[2], Reinhard RADERMACHER[3]
Center for Environmental Energy Engineering
Department of Mechanical Engineering, University of Maryland
College Park, MD 20742 USA
[1,2]Tel: 301-405-8726, [3]Tel: 301-405-5286, Fax: 301-405-2025
Email: [1]jwinkler@umd.edu, [2]vikrant@umd.edu, [3]raderm@umd.edu

Doron SHAPIRO
Ingersoll-Rand Climate Control
Bridgeton, MO 63044 USA
Tel: 314-298-4730, Fax: 314-298-4765
Email: doron_shapiro@irco.com

*Corresponding Author.

ABSTRACT

The interest in natural refrigerants, such as carbon dioxide, has been growing in recent years due to the high direct global warming potential of common HFC refrigerants. Despite the environment-friendly characteristics of CO_2 as a refrigerant, due to high heat rejection temperatures and transcritical operation, CO_2 cannot match the high energy efficiency associated with current HFC technology. Thus, additional measures must be taken to achieve high COP when using CO_2. One approach is to use CO_2 as one of the fluids in a cascade system along with a HFC refrigerant as the high side fluid. Such systems may have roughly 75% less HFC refrigerant charge, and the global warming potential is reduced compared to a baseline system using only HFC refrigerant. When used as a second fluid in a cascade system, the CO_2 cycle remains in the subcritical region, thus increasing the cycle's COP. In this paper an approach to model cascade systems is presented. The model is validated using experimental data for a R404A/CO_2 cascade system and results are discussed. The simulation tool is developed to account for additional components in the system such as multiple condensers and compressors. Some test points in the experimental system were run using a set of parallel compressors, which can be easily addressed by the simulation tool.

1. INTRODUCTION

Low temperature vapor compression refrigeration systems are often very energy intensive due to the high pressure ratios required to pump heat from a low temperature source. Such systems are designed to operate at evaporating temperatures typically below -30.0°C with condensing temperatures dictated by the ambient temperature. Low temperature systems are generally limited to conventional HFC refrigerants due to the large temperature lift. The thermodynamic properties of certain HFC refrigerants allow for the most efficient operation of a conventional low temperature vapor compression system, however HFC refrigerants are associated with high direct global warming potential. Large-scale commercial low temperature vapor compression systems often use large amounts of refrigerant charge (roughly on the order of 100's kg of refrigerant) in order to provide cooling to multiple zones, which increases the environmental impact of refrigerant leaks from the system.

Due to the increasing interest in environmental protection and conservation, there has been a recent resurgence in the interest of natural refrigerants. Carbon dioxide, for example, has been embraced as an environment-friendly refrigerant due to its low global warming potential. However, due to the low critical temperature of CO_2, heat rejection occurs at a high temperature well above the critical point, reducing the system performance. The use of

CO_2 as the sole refrigerant in a low temperature system is not necessarily a preferred solution; however the use of CO_2 as the low temperature refrigerant in a cascade refrigeration system is a very promising alternative.

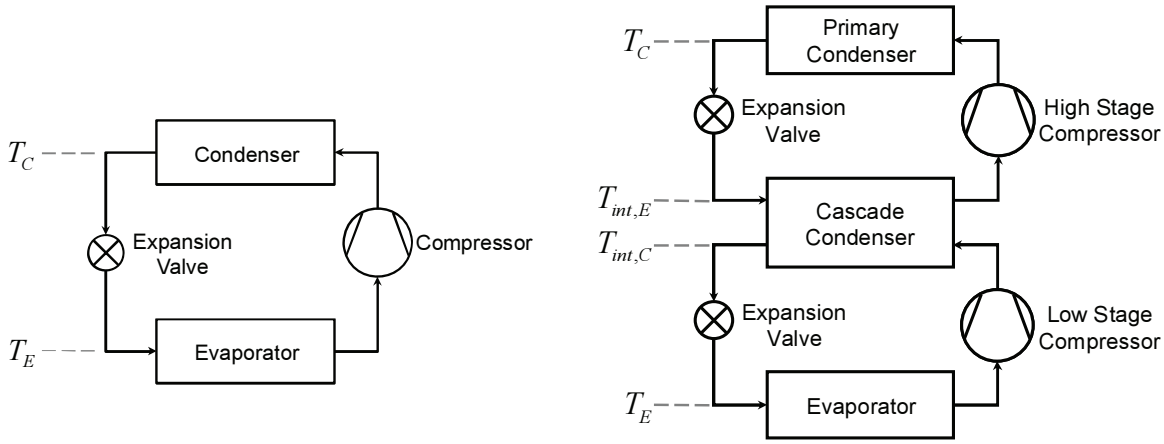

(a) (b)

Figure 1: a) Single stage vapor compression, and b) Cascade vapor compression system

A simple cascade vapor compression system is shown in Figure 1b. The system consists of two conventional vapor compression systems coupled through a cascade condenser. The evaporator in the low temperature system absorbs heat from the conditioned space. The heat absorbed by the low temperature evaporator along with the work input from the low stage compressor is rejected to the high temperature vapor compression system through the cascade condenser. The heat transferred to the high temperature vapor compression system in the cascade condenser and the work input from the high stage compressor is rejected in the primary condenser. One of the main benefits of such systems is that various refrigerants suitable for the corresponding temperature range can be used in each stage.

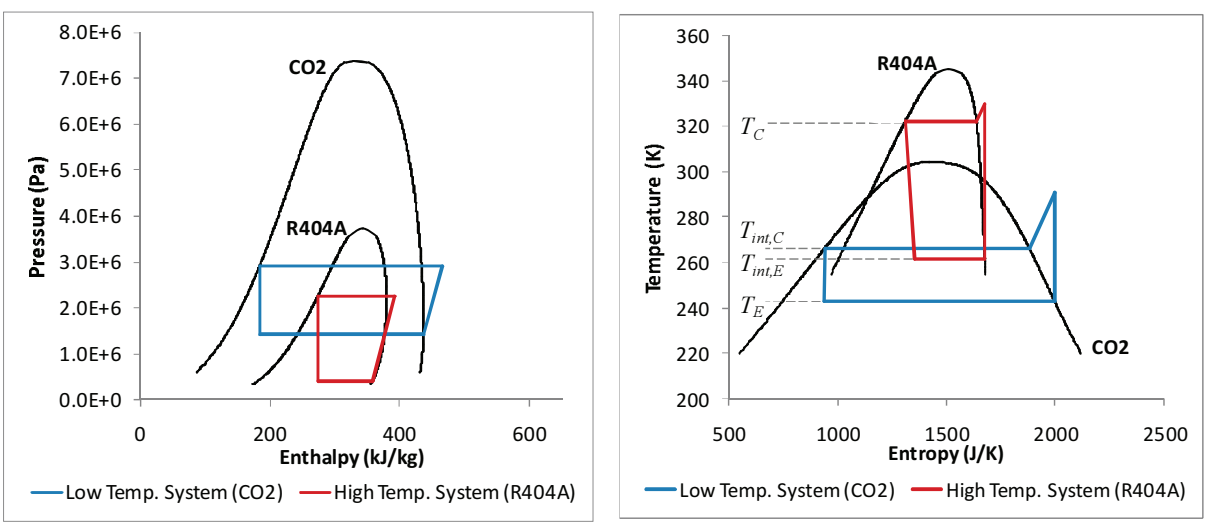

(a) (b)

Figure 2: (a) Pressure enthalpy and (b) temperature entropy diagram of a theoretical cascade system

The use of a conventional HFC refrigerant, such as R404A, as the high temperature refrigerant along with CO_2 as the low temperature refrigerant is a suitable combination for low temperature refrigeration. In an R404A/CO_2 cascade system the heat rejection of the low temperature system occurs at a much lower temperature than a conventional CO_2 vapor compression system. The heat rejection occurs at a temperature below the critical temperature resulting in a higher COP.

In a conventional vapor compression system, as shown in Figure 1a, there are two temperature levels, namely the evaporating temperature, T_E, and the condensing temperature, T_C. For a properly designed system, these temperature levels are ultimately dictated by the temperatures of the conditioned space and ambient. However, in a cascade system there are four temperatures levels; the two additional temperatures being the condensing temperature of the low temperature system, $T_{int,C}$, and the evaporating temperature of the high temperature system, $T_{int,E}$. The two intermediate temperatures drive heat transfer from the low temperature system to the high temperature system. The four temperature levels for an ideal cascade vapor compression system are shown on the T-s diagram depicted in Figure 2b. The corresponding P-h diagram is shown in Figure 2a. Despite the carbon dioxide cycle operating in the subcritical region, the operating pressures remain higher than the corresponding pressures in the R404A high temperature system.

Similar to the conventional system, the condensing and evaporating temperatures (T_E and T_C) are dependent on the surrounding environmental conditions. However, the intermediate temperatures for a given operating point are dependent on the design of the system and ideal temperatures can be determined through the use of optimization. Lee *et al.* (2006) points out that optimization studies of cascade systems are lacking, however only carries out a thermodynamic analysis of a cascade system and details regarding heat exchanger characteristics are not included in the simulation. Prior to conducting optimization studies of cascade systems, a validated simulation tool must be developed. This paper presents a generalized simulation technique to modeling a cascade vapor compression system and presents validation results using experimental data from an R404A/CO_2 cascade system.

2. MODELING PROCEDURE

One approach to simulating a cascade vapor compression system is to simulate the low and high temperature systems individually. In the system shown in Figure 3, the heat rejection in the condenser is being absorbed by a secondary fluid. Prior to simulating this system, the secondary fluid inlet condition and mass flow rate is typically specified prior to executing the condenser model. If the system shown in Figure 3 was being used as the low temperature system in a cascade vapor compression system, the secondary fluid inlet condition and mass flow rate would be provided through simulation of the high temperature system. The system shown in Figure 3a contains additional components compared to a conventional vapor compression system. Thus, a generalized solution approach to solve non-cascade vapor compression system containing multiple components should be implemented to handle complex system configurations.

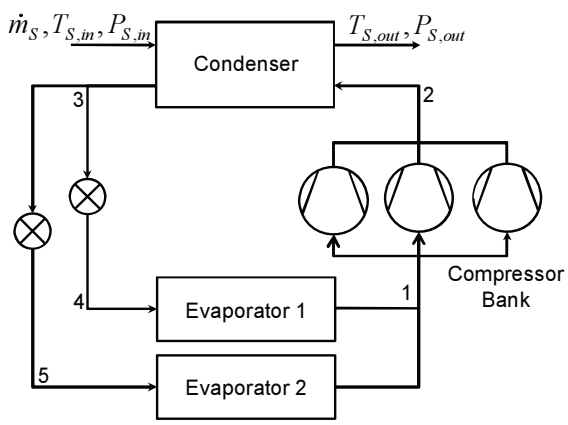

(a)

$$\vec{x} = \begin{bmatrix} P_1 \\ P_2 \\ P_3 \\ P_4 \\ P_5 \\ h_1 \end{bmatrix} \qquad \vec{r} = \begin{bmatrix} \sum_{i=1}^{n} \dot{m}_{Exp,i} - \sum_{j=1}^{m} \dot{m}_{Com,j} \\ \sum_{i=1}^{n} \dot{m}_{Exp,i} h_{Evap,out,i} - h_1 \sum_{j=1}^{m} \dot{m}_{Com,j} \\ P_{Evap,1,out} - P_1 \\ P_{Evap,2,out} - P_1 \\ P_{Cond,out} - P_3 \\ h_{SC} - h_{Cond,out} \end{bmatrix}$$

(b) (c)

Figure 3: (a) Diagram of a multi-component vapor compression system, (b) vector of unknown solution variables, and (c) corresponding set of residual equations

2.1. Vapor Compression System Simulation

An approach to simulate a multi-component vapor compression system has been presented by Winkler *et al.* (2007) and the reader is asked to refer to this paper for a more complete description about the solution algorithm. In general, to simulate a vapor compression system the solution algorithm must ascertain the refrigerant condition at each state point within the cycle along with the mass flow rate through each component. Particular state points and

mass flow rates can be calculated using various component models. For example, a compressor model typically calculates a mass flow rate given an inlet pressure and enthalpy along with the outlet pressure. The total mass flow rate calculated by the compressor bank in Figure 3a can be used to execute the condenser model. Similar to the compressor, an expansion valve model typically calculates a mass flow rate which can be used to execute the evaporator model connected downstream of the valve. The suction enthalpy and state point pressures are selected as the unknown values, and the remaining state points and refrigerant mass flow rates are determined as the system solver iteratively solves for the unknown valves. The unknown values can be placed in a solution vector, as shown in Figure 3, which is initially filled with appropriate guess values.

Of course, a set of equations must be formulated with the number of equations equivalent to the number of unknown variables. The solution procedure initiates with running the compressor bank using the suction enthalpy (h_1) and the suction and discharge pressures (P_1 and P_2). The total mass flow rate and mean discharge enthalpy, calculated using adiabatic mixing, are propagated to the condenser prior to the model being executed. The condenser model calculates the enthalpy at state point 3 and an outlet pressure using pressure drop correlations. Using the pressure at state point 3 (P_3) and the outlet enthalpy of the condenser, each expansion valve model calculates a mass flow rate. The corresponding expansion valve mass flow rate and outlet enthalpy along with the pressures at state points 4 and 5 (P_4 & P_5) are then used as inputs to run the corresponding evaporator model. Each evaporator model calculates an outlet enthalpy and pressure. The calculated outputs from the component models are used in formulating a vector of residual values, shown in Figure 3c, which represent the set of equations being solved to determine the set of unknown values. For this case, the system subcooling has been chosen to close the set of equations and thus a value for the subcooling must be input to the solution algorithm. The set of unknown values are simultaneously adjusted by a nonlinear equation solver until the residuals satisfy a specified tolerance.

2.2. Cascade Vapor Compression System Simulation

Once a solution algorithm to simulate a vapor compression system has been developed, extending it to handle cascade systems is not difficult. As previously mentioned, in a cascade system heat is transferred from the low temperature system to the high temperature system through the cascade condenser. The cascade condenser model serves as the condenser in the low temperature system and evaporator in the high temperature system.

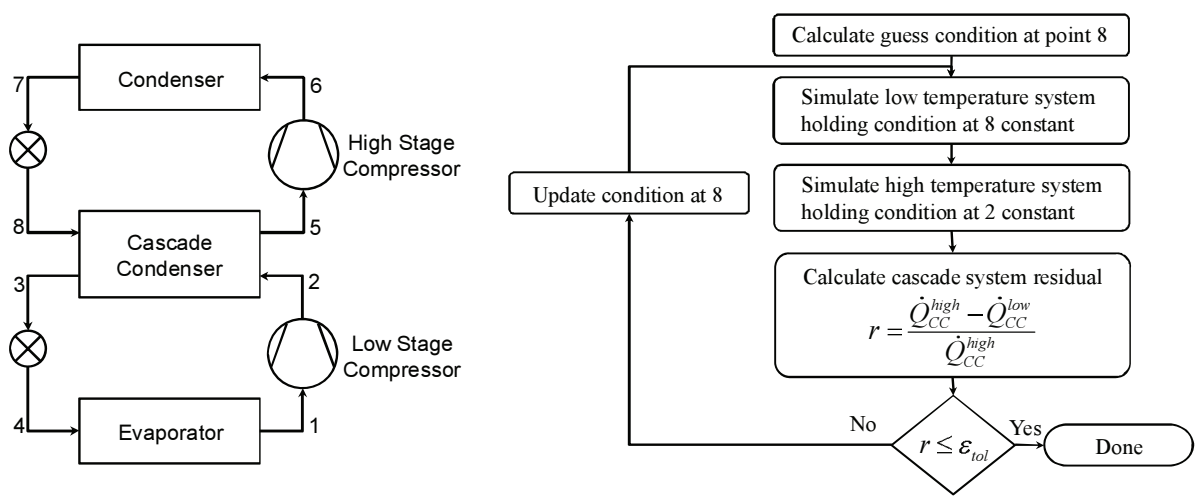

(a) (b)

Figure 4: (a)Diagram of a cascade system, and (b) a flow chart describing the cascade simulation solution approach

A flow chart describing the approach implemented to simulate the cascade system is shown in Figure 4b. The solution procedure starts by guessing an inlet condition to the cascade condenser at the point of the high temperature system evaporator inlet (state point 8 in Figure 4a). Using the guessed condition and holding that condition constant, the solution algorithm discussed in Section 2.1 is used to solve the low temperature vapor compression system. Upon arriving at the solution, the inlet condition to the cascade condenser in the low temperature system will be determined (state point 2 in Figure 4a). This condition is then held constant while the high temperature vapor compression system is solved. Since state point 8 is likely to change after simulating the high temperature system, the cascade condenser heat load of the low temperature system and high temperature system will not match. Since

under steady state operation the heat being rejected from the low temperature system must equal the heat being absorbed by the high temperature system, state point 8 is successively updated until the calculated heat load of the cascade condenser is equivalent in both the low and high temperature systems. A normalized residual, *r*, is used to determine if the solution procedure has reached convergence, as shown in Equation 1.

$$r = \frac{\dot{Q}_{CC}^{high} - \dot{Q}_{CC}^{low}}{\dot{Q}_{CC}^{high}} \tag{1}$$

In the above equation, $\dot{Q}_{CC}^{high}$ is the cascade condenser heat load calculated when the model is being run as the evaporator in the high temperature system, and similarly $\dot{Q}_{CC}^{low}$ is the cascade condenser heat load calculated when the model is being run as the condenser in the low temperature system. A tolerance value of 1.0E-4 was used to determine if the cascade solver converged, which corresponds to an error between the two capacities of less than 1W for a 10kW system.

3. SIMULATION VALIDATION RESULTS

3.1. Experimental System

Experimental results from a cascade system using R404A as the high temperature refrigerant and CO_2 as the low temperature refrigerant were used to validate the simulation tool. The experimental system is shown in Figure 5. The high temperature system consisted of two compressors of varying capacity and a primary and secondary condenser. The water flow rate through the primary condenser was adjusted for each case to achieve the condensing temperature listed in Table 1 and in cases 2-6 a secondary condenser had to be used to further reduce the R404A condensing temperature. The glycol flow rate through the CO_2 evaporator was adjusted to maintain a constant evaporating temperature for all six cases. Each of the compressors in the high temperature system could run in either a loaded configuration (all four cylinders used to compress refrigerant) or unloaded configuration (two of four cylinders used to compressor refrigerant).

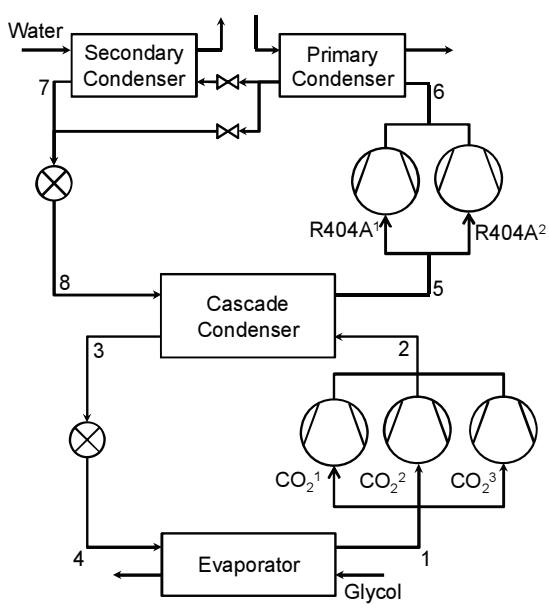

Figure 5: Diagram of experimental cascade system

Table 1: Desired R404A saturation temperatures and R404A condenser configuration

Case	R404A Cond. Temp. (°C)	CO2 Evap. Temp. (°C)	R404A 2nd Cond.
1	48.9	-31.7	Off
2	40.6	-31.7	Off
3	32.2	-31.7	On
4	32.2	-31.7	On
5	21.1	-31.7	On
6	10.0	-31.7	On

Table 2: Cascade system compressor configuration

Case	R404A[1]	R404A[2]	CO_2[1]	CO_2[2]	CO_2[3]
1	Unloaded	Off	Off	On	Off
2	Loaded	Off	Off	Off	On
3	Unloaded	Off	On	On	Off
4	Unloaded	Off	On	On	Off
5	Unloaded	Off	On	On	Off
6	Off	Unloaded	Off	Off	On

Table 2 lists the compressor configurations for both the high temperature and low temperature systems. Though only a single compressor is run for each case in the high temperature system, cases 2-5 utilize two CO_2 compressors running simultaneously in a parallel arrangement. The low temperature system compressor bank consisted of three compressors of various sizes. Brazed plate heat exchangers were used as the secondary R404A condenser, cascade condenser, and CO_2 evaporator. The primary R404A condenser was a water-cooled shell and tube heat exchanger.

3.2. Modeling Procedure and Assumptions

The compressors in the high and low temperature systems were modeled using manufacturer data. For the high temperature system, compressor coefficients for the loaded and unloaded operation were used along with the compressor polynomial equation provided by ARI Standard 540-1999. The CO_2 compressors were specifically manufactured to operate in the subcritical region with condensing temperatures in the range of 0 to -20°C and coefficients according to ARI Standard 540-1999 were derived using manufacturer rated performance data.

The low temperature evaporator, cascade condenser, and high temperature condensers were modeled using overall heat transfer coefficients and heat transfer areas. Details regarding the geometric details of the heat exchangers were not available and only the total heat transfer area was known. Thus, a simple multiple zone UA-based heat exchanger model was developed. Apportioning heat transfer area to a given phase regime is important to accurately capture the effect of changing temperature gradients within the heat exchanger. Heat transfer areas were apportioned based on the refrigerant and secondary fluid inlet conditions. For example, the cascade condenser as shown in Figure 6a, and on the condensing (CO_2) side has superheated refrigerant flowing in from the low temperature compressor bank which is de-superheated and eventually subcooled. On the other side (R404A), refrigerant enters as a two-phase mixture which is eventually superheated. As shown in Figure 6b there are four heat transfer zones in the exchanger; namely a subcooled liquid to two-phase zone, a two-phase to two-phase zone, a two-phase to superheated zone, and a superheated to superheated zone. Each zone was modeled using effectiveness-NTU relations as described by Incropera and DeWitt (1996). The low temperature evaporator and high temperature condenser are essentially simplifications of the cascade condenser model since the secondary fluid remains in the liquid phase.

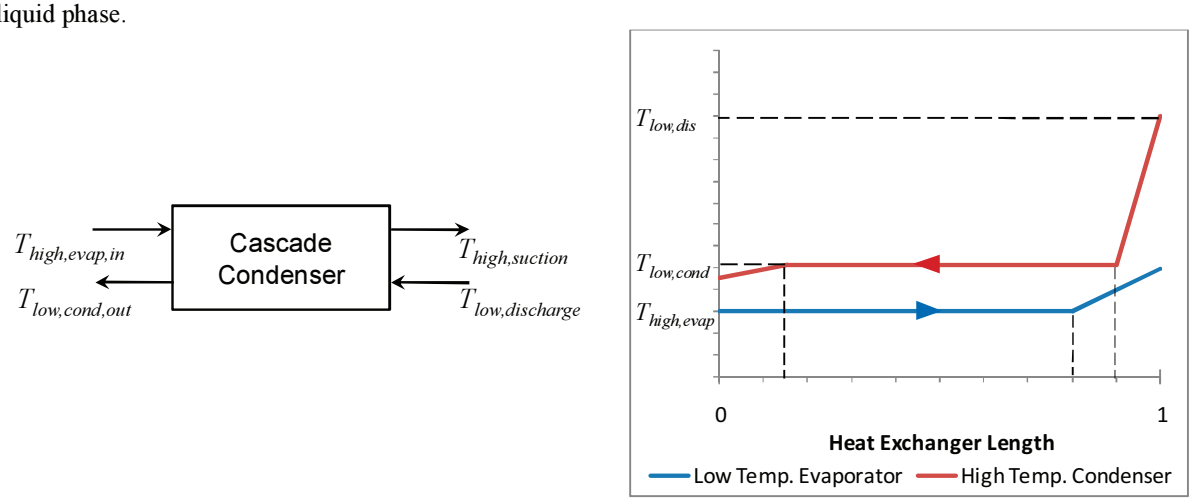

(a) (b)

Figure 6: (a) Schematic showing cascade condenser inlet temperatures, and (b) diagram showing temperature profile through the cascade condenser

As previously mentioned, the overall heat transfer areas were provided from manufacturer data. The overall heat transfer coefficients were calculated using experimental data and were assumed constant. Since the pressure drop though the heat exchangers was not measured during the experimental phase, the pressure drop through the heat exchangers was neglected. Accurate modeling of the heat exchangers was the most critical step in conducting the validation. Though the assumptions used to model the exchangers are arguably simplistic, the component-based nature of the simulation tool allows for easy substitution with more detailed heat exchanger models once available (Winkler *et al.*, 2006). Winkler *et al.* (2006) and Winkler *et al.* (2008) provide validation results for different types of air-to-refrigerant vapor compression systems in which detailed air-to-refrigerant heat exchanger models were used in the simulation.

The experimental system utilized a thermostatic expansion valve as the throttling device in the low and high temperature systems, and thus the validation was conducted using the experimental suction superheat as input. In all cases for the high temperature system, the refrigerant was subcooled a few degrees at the condenser outlet, thus it made sense to use the experimental subcooling as input to the simulation as described in Section 2.1. However in the low temperature system, low quality two-phase refrigerant exited the cascade condenser and there was not a

subcooling value to use as input to the simulation. Therefore, the system discharge pressure was selected as input to the simulation in order to close the system of equations. Thus, the final residual in Figure 3c was replaced with Equation 2, where $P_{dis,exp}$ is the experimental discharge pressure for that particular case.

$$r = P_{dis,exp} - P_2 \tag{2}$$

3.3. Validation Results

The low and high temperature system capacity and power consumption validation results are shown in Figure 7. For the low temperature system, the average error in system capacity was 2.6% with a maximum error of 3.6%. Capacity results for the high temperature system are similar with an average error of 2.5% and a maximum error of 2.9%. The compressor power was accurately predicted for the low temperature system with an average error of 2.9% and a maximum error of 5.1%. For the high temperature system, the power consumption was predicted with an average error 4.5%, however the maximum error was fairly high with an error of 11.4%. It is difficult to determine the source of this error since it was the only case in which R404A compressor 1 was being run fully loaded and pressure ratio for this case was predicted to within 2.3%.

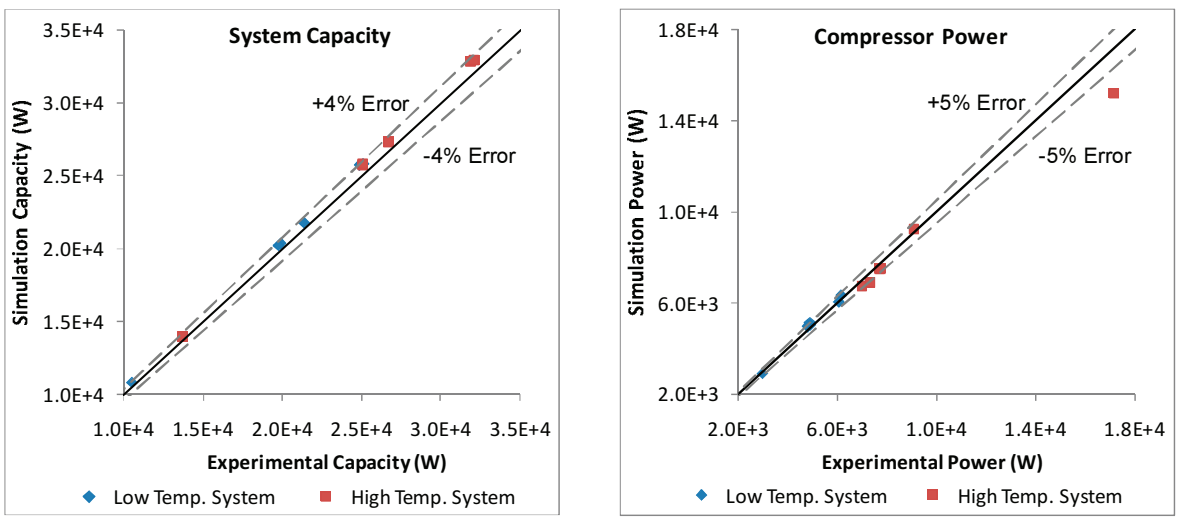

(a) (b)

Figure 7: Cascade system validation results for (a) system capacity and (b) compressor power consumption

The low and high temperature system mass flow rate results are shown in Figure 8a. The average error for the low temperature system mass flow rate was 2.7% with a maximum error of 3.6%. For the high temperature system the average error was 4.4% with a maximum error of 6.8%. The maximum error in the mass flow rate prediction occurred for the cases with the maximum error in predicted saturation temperatures.

The predicted saturation temperatures are shown in Figure 8b and all saturation temperatures were predicted to within ±3°C. The error in the saturation temperatures is rather small compared to the temperature gradient between the refrigerant and secondary fluid in the low temperature evaporator and high temperature condensers. There was no error in the low temperature system condensing temperature since the experimental discharge pressure was used as input to the simulation as described in Section 3.2. The high temperature system evaporating temperature was predicted with an average error of 1.5°C, and thus the temperature gradient across the cascade condenser was accurately accounted for. System saturation temperatures are the primary driving force behind the heat transfer between the refrigerant and the surrounding environment and thus it is important that the saturation temperatures be accurately predicted. However, it is possible to accurately predict the saturation temperatures while failing to accurately predict the pressure ratio, which is the primary factor dictating the compressor power consumption. The pressure ratio for the low temperature system was predicted with average error of 2.8% and a maximum error of 4.3%. Again, this is expected since the experimental discharge pressure was used as input to the simulation. The pressure ratio of the high temperature system was not as accurately predicted and there was an average error of 9.4% with a maximum error of 15.2% between the simulated and experimental values. This seems to be attributed to the

simplifications used in modeling the condensers. The maximum error in the pressure ratio prediction did not coincide with the maximum error in the high temperature system compressor power prediction.

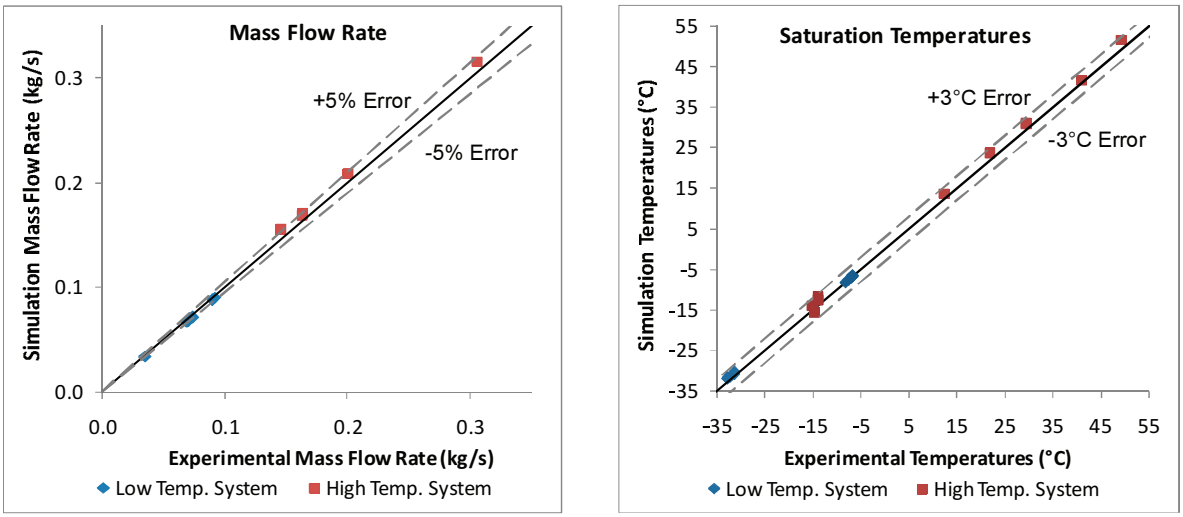

(a) (b)

Figure 8: Cascade system validation results for (a) system mass flow rate and (b) saturation temperatures

4. CONCLUSIONS

In this paper, a cascade system simulation algorithm has been discussed and implemented with the help of a component-based modeling tool for vapor compression systems. The low temperature and high temperature vapor compression systems consisted of multiple compressors and the high temperature system utilized two condensers. The simulation tool, despite using simple heat exchanger models, predicted the COP with an average error of 4.4% and a maximum error of 11.3%.

REFERENCES

ANSI/ARI Standard 540-1999, 1999, "Positive Displacement Refrigerant Compressors and Compressor Units", Air-Conditioning and Refrigeration Institute, Arlington, VA

Incropera, F.P., and DeWitt, D.P., 1996, *Fundamentals of Heat and Mass Transfer*, John Wiley & Sons, New York, NY, p. 582-618.

Lee, T.S., Liu, C.H., and Chen, T.W., 2006, "Thermodynamic Analysis of Optimal Condensing Temperature of Cascade-Condenser in CO2/NH3 Cascade Refrigeration Systems", *International Journal of Refrigeration*, Vol. 29, p. 1100-1108.

Winkler, J., Aute, V., and Radermacher, R., 2006, "Component-Based Vapor Compression Simulation Tool with Integrated Multi-Objective Optimization Routines", *International Refrigeration and Air Conditioning Conference at Purdue*, Purdue University, July 2006.

Winkler, J., Aute, V., and Radermacher, R., 2007, "Comprehensive Investigation of Numerical Methods in Simulating a Steady State Vapor Compression System", *International Journal of Refrigeration*, doi:10.1016/j.ijrefrig.2007.08.008.

Winkler, J., Aute, V., and Radermacher, R., 2008, "Simulation and Validation of a Two-Stage Flash Tank Cycle using R410A as a Refrigerant", *International and Refrigeration and Air Conditioning Conference at Purdue*, Purdue University, July 2008.