Purdue University
Purdue e-Pubs

International Refrigeration and Air Conditioning Conference

School of Mechanical Engineering

2008

Experimental Study on Concentration of Aqueous Lithium Bromide Solution by Vacuum Membrane Distillation Process

Zanshe Wang
Xi'an Jiaotong University

Shiyu Feng
Xi'an Jiaotong University

Xiangfeng Shi
Zhuhai Landa Compressor Co.

Zhaolin Gu
Xi'an Jiaotong University

Follow this and additional works at: http://docs.lib.purdue.edu/iracc

Wang, Zanshe; Feng, Shiyu; Shi, Xiangfeng; and Gu, Zhaolin, "Experimental Study on Concentration of Aqueous Lithium Bromide Solution by Vacuum Membrane Distillation Process" (2008). *International Refrigeration and Air Conditioning Conference.* Paper 915.
http://docs.lib.purdue.edu/iracc/915

This document has been made available through Purdue e-Pubs, a service of the Purdue University Libraries. Please contact epubs@purdue.edu for additional information.
Complete proceedings may be acquired in print and on CD-ROM directly from the Ray W. Herrick Laboratories at https://engineering.purdue.edu/Herrick/Events/orderlit.html

Experimental Study on Concentration of Aqueous Lithium Bromide Solution by Vacuum Membrane Distillation Process

Zanshe WANG[1], Shiyu FENG[1], Xiangfeng SHI[2], Zhaolin GU[3]*

[1] Power and Energy Engineering School of Xi'an Jiaotong University,
Xi'an, Shaanxi, P. R. China
Phone: +86-29-82664928, Fax: +86-29-82664928,
E-mail: Wangzanshe@gmail.com; Shiyuf@mail.xjtu.edu.cn
[2] Zhuhai Landa Compressor Co., Ltd.,
2097 middle of juzhou road, Zhuhai City, Guangdong Province, China
Phone: +86-756-3324935, Email: lucky-casino@163.com
[3] Human Settlements and Civil Engineering School of Xi'an Jiaotong University,
Xi'an, Shaanxi, P. R. China
Phone: +86-29-82664928, Fax: +86-29-82664928,
E-mail: Guzhaoln@mail.xjtu.edu.cn

*Department of Environmental Science and Technology, School of Human Settlements and Civil Engineering, Xi'an Jiaotong University, Xi'an 710049, P. R. China
E-mail: Guzhaoln@mail.xjtu.edu.cn

ABSTRACT

This study aims to investigate the applicability of vacuum membrane distillation for concentrating aqueous lithium bromide solution, and to analyze the feasibility of applying vacuum membrane distillation process to the absorption refrigeration system. Hydrophobic polyvinylidene fluoride (PVDF) was adopted as the membrane material, and was made into hollow fiber membrane module. Commercial aqueous lithium bromide solution with 50% concentration flows through the inner side of membrane thread while the vacuum degree in outer side retain constant from 0.09Mpa to 0.095MPa, the feed temperature varied from 65℃ to 90℃.

The experiments showed that the permeation flux of vapor water increased quickly when the feed temperature rose from 65℃ to 90℃. The permeation flux also increased as the feed flux increased; however, the feed flux was limited by the intensity of PVDF. The permeation flux went up when the vacuum degree of cold side increased, but the tendency went flat as the vacuum degree increased more.

Hollow fiber membrane module can provide quite adequate contact area for the feed solution in limited space, and need not heat the solution to boiling point. So it may become a new type of separation device for lithium bromide absorption refrigeration system.

1. INTRODUCTION

The lithium bromide absorption refrigeration system has more advantages since it can utilize or callback waste heat. However, more heat energy such as low grade waste heat, geothermic water, and solar hot water, etc. could not be used adequately because the temperature as low as below 85℃ [1]. Traditional single effect lithium bromide absorption refrigeration system can't operated effectively by heat resource below 80℃ for the low COP. In order to use the low grade heat, many methods were promoted to degrade the generator temperature. GU Yaxiu[2]promoted a solar pump-free lithium bromide absorption chiller system, generator temperature scope from 80-93℃, average COP of the system was 0.725. WU Jiafeng[3] changed the absorption refrigeration system flow by adding a vapor compressor between the generator and the condenser, vapor compressor could enhance the vapor pressure when the generator temperature was too low, COP of the system can adjust from 0.65-0.75 according to the generator temperature. MA Weibin[1] and Sumathy K[4] introduced the two-stage lithium bromide absorption refrigeration system which can apply the low temperature from 70-85℃, however, the COP was 0.39 and the investment would increase one third.

In traditional lithium bromide absorption refrigeration system, aqueous lithium bromide solution is concentrated and dissociated in the generator under nearly vacuum conditions, solution was heated to the boiling point and the water vapor is cooled in the condenser. The boiling point is related with the heater temperature, cooling temperature, evaporator temperature, and the heat transfer mode in the generator. Thus, it seems difficult to applying low grade heat in the traditional lithium bromide absorption refrigeration system because of the solution separation mode.

Membrane distillation was a new technique about solution separation process. Hydrophobic membrane was adopted as the separation unit, only water vapor can pass though the membranes pore while liquid solution can not. The vapor pressure difference between the opposite sides of membrane is the main impellent factor of mass transfer. The membrane distillation temperature is lower than the traditional distillation equipment because it need not heat the feed solution to the boiling point. So it is possible to utilize the low grade heat such as geothermic water, solar hot water, and low temperature waste heat [5], etc. Sudoh M[6] described the features of direct contact membrane distillation process of lithium bromide solution with 0-55% concentration; hydrophobic polytetrafluoroethylene membrane (PTFE) acted as the membrane distillation unit, and the author believed that the concentration boundary layer and the thermal boundary layer were hardly negligible in distillation process, but the influence of feed flux and feed temperature on the permeation flux the article did not mention.

The objective of this paper is to clarify the permeation flux in vacuum membrane distillation process about aqueous lithium bromide solution using experimental method. The influence factors of the feed temperature, the feed flux, and the vacuum degree in cold side are tested.

2. MECHANISM OF VACUUM MEMBRANE DISTILLATION

2.1 Membrane material and membrane module

Microporous hydrophobic membranes like Polythene (PE), polypropylene (PP), polytetrafluoroethylene(PTFE), and polyvinylidene fluoride(PVDF) were the major membrane material and were widely used in vacuum membrane distillation process. They were often made into plate and frame module, spiral wound module, tubular module, capillary module, and hollow fiber module. According to the operating methods on water vapor cooling, the membrane distillation mode can be sorted as direct contact membrane distillation (DCMD), air gap membrane distillation (AGMD), sweep gas membrane distillation, and vacuum membrane distillation (VMD).

This paper will choose the hollow fiber module with PVDF material as the operating assembly. Membrane material and hollow fiber membrane module was showed in Figure.1.

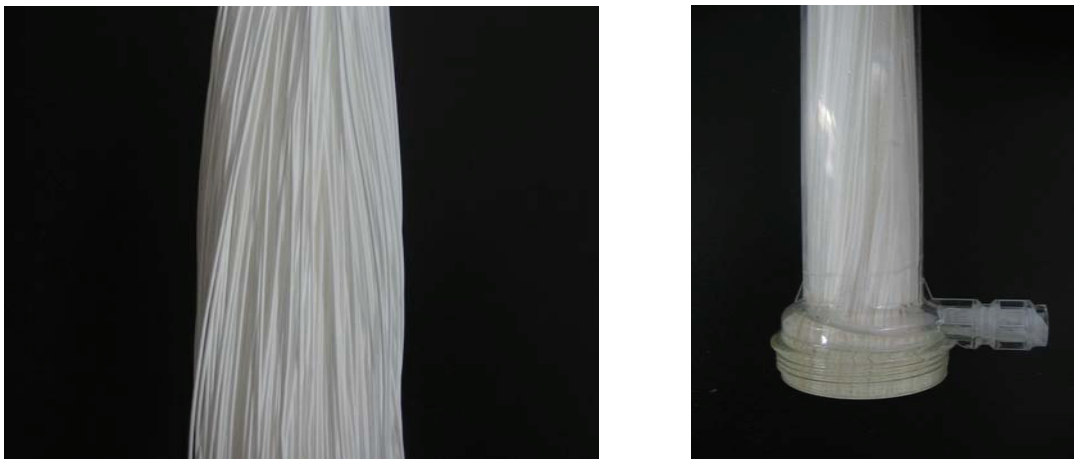

(a) PVDF membrane material (b) hollow fiber membrane module

Fig.1. membrane material and hollow fiber membrane module

Hundreds of membrane threads were filled in the shell and the shell was sealed stably. The feed solution flow through the inner membrane threads while the outer sides keeping constant pressure. The parameter of membrane material and hollow fiber membrane module were showed in table 1 and table 2.

Table 1 Parameters of PVDF membrane thread

Average aperture /μm	Porosity	Inner diameter /mm	Wall thickness /mm	Outer diameter /mm
0.16	85%	0.8	0.15	1.1

Table 2 Parameters of hollow fiber membrane module

outer diameter /mm	Inner diameter /mm	Effective length /mm	Number of membrane thread	Membrane area /m^2
50	42	400	300	0.3

2.2 Principle of vacuum membrane distillation

Two basic conditions must be satisfied in VMD process, one is the membrane material, it must be made of microporous hydrophobic membrane in order to guarantee only water vapor can pass though the membrane pore. The other is the temperature difference in two sides of the membrane. The saturated vapor pressure difference was the driving forces that water vapor diffuse through the pore. Figure.2 shows the schematic plan of VMD process, the feed solution with high temperature flow across the inner side of membrane, its saturated temperature T_1 is higher than the temperature T_2 in outer side of membrane, water vapor diffused across the pore. The microscopic process of VMD is quite complicated because phase change happened in the mass transfer process. The well-known process including three steps: liquid water evaporated in feed solution side, then, water vapor diffused across the pore, and finally water vapor cooled in the condenser. The permeation flux of vapor water depends on the membrane property, feed temperature, feed flux, feed concentration, and the vacuum degree of cold side.

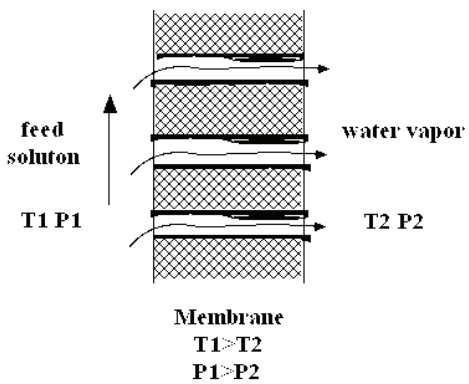

Fig.2. schematic plan of VMD process

3. EXPERIMENTAL SYSTEM AND METHOD

3.1 Experimental apparatus

Figure.3 shows the schematic plan of experimental apparatus of VMD. Thermostat water bath can heat feed solution from room temperature to 95℃, and the temperature fluctuate≤±0.05℃. Recycled water vacuum pump can keep vacuum degree as maximum as 0.098MPa. Pt100/A was chose as the temperature probe, the measuring error: ± (0.15+0.002|t|). Accurate pressure gauge measuring range: 0~0.16Mpa, accuracy grade: 0.4. Accurate vacuum pressure gauge measuring range: -0.1~0.06Mpa, accuracy grade: 0.4. Digital conductivity meter measure the electric conductivity of liquid water, its measuring range: 0～2×10^5(μs/cm). The mass of distillations water is weighed in by electronic balance.

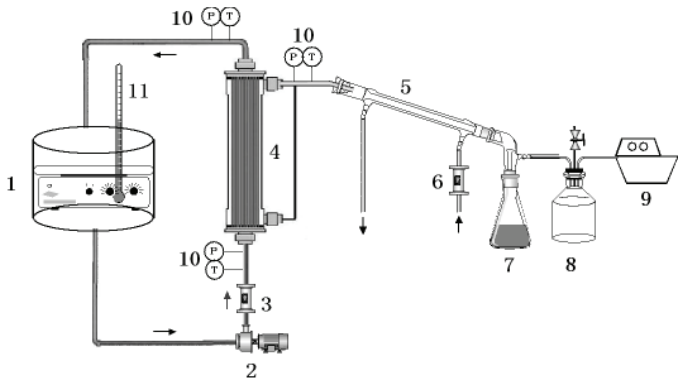

1：thermostat water bath；2：magnetic pump；3：flowmeter；4：membrane module；5：condenser pipe；
6：cooling water flowmeter；7：receiving tank；8：adjuster of vacuum degree；9：vacuum pump；
10：temperature probe, pressure sensor；11：feed thermometer

Fig.3. Schematic plan of experimental apparatus

Table 3 shows the parameter scope in the series experiments. What is worth mentioning is that the permeation water must be add in the feed tank after the test finished in order to maintain the feed concentration keeping 50%.

Table 3 parameter scope in the series experiments

Mass concentration	Feed temperature/℃	Feed flux/Lh^{-1}	Vacuum degree/MPa
50%	65～88	40～120	0.085～0.095

3.2 Data processing

Permeation flux means the quality of permeation water in an hour and per unit area. The Permeation flux is described as followed:

$$J = W/(S \cdot t) \tag{1}$$

Where J is the permeation flux, kg/(m^2·h); W is the quantity of water, kg; S is the membrane area, m^2; and t is the time, h.

Membrane rejection ratio means the percentage of the solute quality after and before the experiment [7]. The ratio of concentration to electric conductivity will keep constant in a range of salt concentration content [8], so the membrane rejection ratio is described as followed:

$$Ru = \frac{C_1 - C_2}{C_1} \times 100\% = \frac{K_1 - K_2}{K_1} \times 100\% \tag{2}$$

Where Ru is the membrane rejection ratio; C_1 is the feed concentration, C_2 is the distillation water concentration; K_1 is the feed electric conductivity, μs/cm; C_2 is the distillation water electric conductivity, μs/cm.

4. EXPERIMENT RESULT AND DISCUSSION

4.1 Influence of feed temperature on permeation flux and membrane rejection ratio

Figure.4 shows that the permeation flux increased linearly when the feed temperature went up, this is because the saturation vapor pressure of solution rises along with the feed temperature going up. As a result, the driving force of water vapor mass transfer enhanced, the water vapor could pass across the pore more easily. Moreover, the trendline of permeation flux decreased with the vacuum pressure increased more.

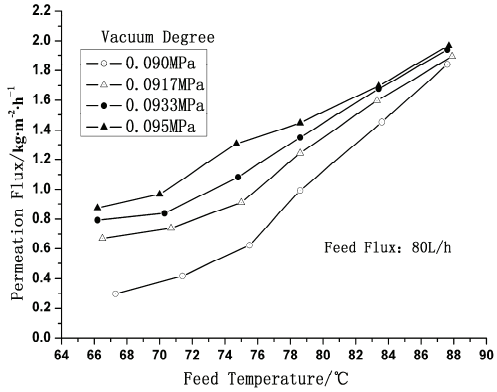

Fig.4 Influence of feed temperature on permeation flux

Table 4 shows the electric conductivity and membrane rejection ratio of the distillation water in two kinds of vacuum degree conditions. It can be seen that the feed temperature and the vacuum degree have little influence on the electric conductivity and membrane rejection ratio. So we can deem that the PVDF membrane module can fully suit the operating parameter of 100℃ below and 0.095MPa below adequately.

Table.4 Influence of feed temperature on electric conductivity and membrane rejection ratio

Temperature/℃	electric conductivity /μs·cm^{-1}		rejection ratio / %	
	0.09MPa	0.095MPa	0.09MPa	0.095MPa
66	12.8	6.7	99.99	99.99
71	13.1	8.1	99.99	99.99
75	12.8	8.4	99.99	99.99
78	13.2	8.7	99.99	99.99
83	12.9	7.2	99.99	99.99
87	12.6	7.8	99.99	99.99

4.2 Influence of feed flux on permeation flux and membrane rejection ratio

Figure.5 shows that the permeation flux increased when the feed flux going up, this is because the feed speed went up along with the feed flux, and enhanced the perturbation of feed solution flow process, and reduced the thermal boundary layer, debased the diffuse resistance of diffusion at the same time. However, the feed flux was limited by the intensity of the membrane, if the feed flux increased too much, the liquid feed will permeate from some pore.

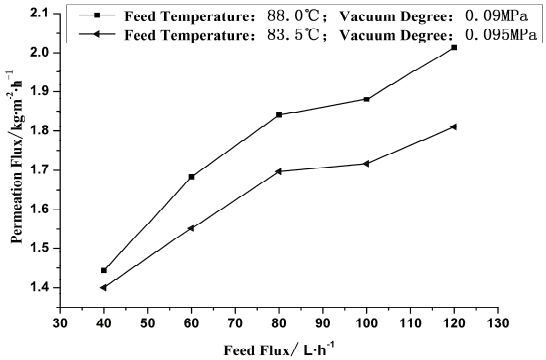

Fig.5 Influence of feed flux on permeation flux

Table 5 shows the electric conductivity and membrane rejection ratio of the distillation water in two kinds of operating conditions. It can be seen that the feed temperature and the vacuum degree have little influence on the electric conductivity and membrane rejection ratio.

Table.5 Influence of feed flux on electric conductivity and membrane rejection ratio

Feed Flux / Lh^{-1}	electric conductivity /μs·cm^{-1}		rejection ratio / %	
	88℃ 0.09MPa	83.5℃ 0.095MPa	88℃ 0.09MPa	83.5℃ 0.095MPa
40	12.1	7.0	99.99	99.99
60	11.9	6.6	99.99	99.99
80	12.6	7.2	99.99	99.99
100	12.3	6.8	99.99	99.99
120	12.6	7.2	99.99	99.99

4.3 Influence of vacuum degree on permeation flux.

Figure.6 shows the permeation flux increased when the vacuum degree rose, this is because the drive force of water vapor mass transfer enhanced. However, the tendency was flat as the vacuum degree increased more because the thermal boundary layer in feed solution did not reduce with the vacuum degree enhancing.

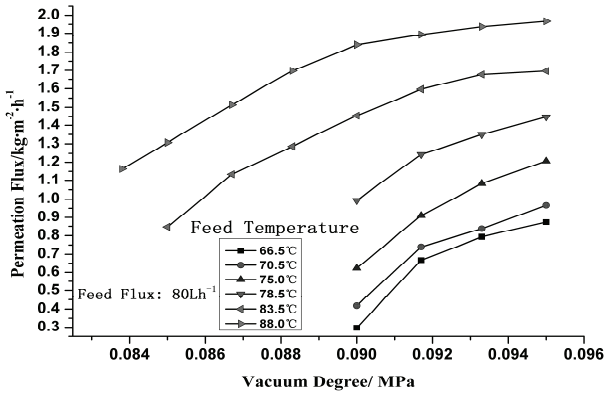

Fig.6 Influence of vacuum degree on permeation flux

5. CONCLUSIONS

- The PVDF hollow fiber membrane module has well rejection ratio, the electric conductivity of distillation water keep quite stability with the change of the feed temperature, the feed flux, and the vacuum degree; the distillation water was quite purity.
- In the test of vacuum membrane distillation process, the permeation flux rose with lifting of the feed temperature since the drive force of water vapor mass transfer enhanced; the feed flux increased, the permeation flux will go up because the perturbation of feed solution flow enhanced, the thermal boundary layer reduced; but the feed flux was limited by the intensity of the membrane. The drive force of water vapor mass transfer reinforced with the vacuum degree increased, and then the permeation flux enlarged.
- The test showed that the hollow fiber membrane module offered quite bulky contact area for the feed solution, the commercial lithium bromide solution can be separated in low temperature, and need not heat the solution to boiling point; it may become a new type of separation device for lithium bromide absorption refrigeration system.

REFERENCES

[1] MA Weibin,XIA Wenhui,YU Chuanbo Industrial Application of a Two-stage LiBR/N2O Absorption Chiller[J].Refprigration. 1998, 04: 40-43

[2] GU Yaxiu, WU Yuyuan KE Xin.Experimental Research on Second Generator in Pump-Free Lithium Bromide Absorption Chiller System[J], Journal of Xi'an Jiaotong University, 2006, 01: 62-66.

[3] WU Jia-Feng CHEN Ya-Ping SHI Ming-Heng, PROMOTION OF COMPRESSOR ASSISTED LiBr ABSORPTION CHILLING CYCLE DRIVEN BY SOLAR ENERGY[J]**.** Journal of Engineering Thermophysics, 2007, 01: 21-23.
[4] Sumathy K, Huang ZC, Li ZF. Solar absorption cooling with low grade heat source -- a strategy of development in South China[J]. Solar Energy, 2002, 72 (2): 155-165.
[5] WANG Xuyun1; 2; ZHANG Lin1; CHEN Huanlin1. Review of membrane distillation[J]. Chemical Industry and Engineering Progress. 2007, 02: 168-172+179.
[6] Sudoh M, Takuwa K, Iizuka H, et al. Effects of thermal and concentration boundary layers on vapor permeation in membrane distillation of aqueous lithium bromide solution[J]. Journal of Membrane Science, 1997, 131 (1-2): 1-7.
[7] HJ/T 271-2006. Specifications for environmental protection product Ultrafiltration equipment[S].
[8] LIU Chenglun, XU Longjun，XIAN Xuefu. Study on the relationship between concentration of salt solution and its conductivity. ENVIRONMENTAL MONITORING IN CHINA. 1999, 04: 21-24.

ACKNOWLEDGEMENT

The authors thank the Ministry of Education key lab of Tianjin Polytechnic University for supplying the PVDF membrane module. This project is support by Shaanxi Science and Technique Foundation, China (grant number 2005K05-G17)