Purdue University
Purdue e-Pubs

International Refrigeration and Air Conditioning Conference

School of Mechanical Engineering

2008

Effect of Inclination Angle on the Air-Side Performance of Aluminum Parallel Flow Heat Exchangers Under Wet Conditions

Naehyun Kim
University of Incheon

Doyoung Kim
University of Incheon

Yongmin Choi
University of Incheon

Howon Byun
University of Incheon

Junhyun Hwang
University of Incheon

Follow this and additional works at: http://docs.lib.purdue.edu/iracc

Kim, Naehyun; Kim, Doyoung; Choi, Yongmin; Byun, Howon; and Hwang, Junhyun, "Effect of Inclination Angle on the Air-Side Performance of Aluminum Parallel Flow Heat Exchangers Under Wet Conditions" (2008). *International Refrigeration and Air Conditioning Conference.* Paper 875.
http://docs.lib.purdue.edu/iracc/875

This document has been made available through Purdue e-Pubs, a service of the Purdue University Libraries. Please contact epubs@purdue.edu for additional information.
Complete proceedings may be acquired in print and on CD-ROM directly from the Ray W. Herrick Laboratories at https://engineering.purdue.edu/Herrick/Events/orderlit.html

Effect of Inclination Angle on the Air-Side Performance of Aluminum Parallel Flow Heat Exchangers under Wet Conditions

Nae-Hyun KIM[1]*, Do-Young KIM[1], Yong-Min CHOI[1], Ho-Won BYUN[1], Jun-Hyun HWANG[2]

[1]University of Incheon, Department or Mechanical Engineering,
Incheon, Korea
E-mail: knh0001@incheon.ac.kr

[2]LG Electronics
Changwon, Korea
E-mail: birdchest@lge.com

ABSTRACT

The effect of inclination angle on the heat transfer and pressure drop characteristics of brazed aluminum heat exchangers is experimentally investigated under wet conditions. Three samples having different fin pitches (1.25, 1.5 and 2.0 mm) were tested. Results show that heat transfer coefficients are not affected by the inclination angle. However, friction factors increase as the inclination angle increases with negligible difference between the forward and backward inclination. The effect of fin pitch on the heat transfer coefficient and on the pressure drop is also discussed. Comparison of the dry and wet surface heat transfer coefficients reveals that dry surface heat transfer coefficients are significantly larger than wet surface heat transfer coefficients. Possible explanation is provided considering the condensate drainage pattern.

1. INTRODUCTION

Fin-and-tube heat exchangers have been widely used as condensers or evaporators in a household air-conditioning system. In the forced convective heat transfer between air and refrigerant, the controlling thermal resistance is on the air-side. To improve the air-side performance, rigorous efforts have been made, which include a usage of high performance fins, usage of small diameter tubes, etc. However, fin-and-tube heat exchangers have inherent short-comings such as the contact resistance between fins and tubes, the existence of a low performance region behind tubes, etc. These short-comings may be overcome if fins and tubes are soldered, and low profile flat tubes with high performance fins are used. Brazed aluminum flat-tube heat exchangers with louver fins could be the choice. Flat tube heat exchangers have been used as condensers of automotive air conditioning units for more than ten years, and they are replacing fin-and-tube condensers of residential air-conditioning units. The possibility of replacing the residential fin-and-tube heat exchangers by flat tube heat exchangers has been studied by Webb and Jung (1992). They showed that, for the same air-side thermal capacity, the flat-tube geometry requires less than half the heat exchanger volume compared with the fin-and-tube counterpart. The advantage of flat-tube heat exchangers has further been studied by Webb and Lee (2001). They compared the thermal performance of flat tube condenser having 866 fins per meter with that of the fin-and-tube condenser having 7.0 mm round tubes and 1024 fins per meter. The flat tube condenser was shown to reduce the material up to 50%.

Recently, evaporators of split-type air-conditioners are frequently installed in ceilings. Ceiling-mounted evaporators provide good air flow distribution as well as saving of installation spaces compared with conventional room-mounted ones. In ceiling-mounted configuration, evaporators are usually installed at some inclined angle due to the limited space in ceilings. Usage of high performance flat tube heat exchangers may further reduce the height of ceiling-mounted evaporators. However, the heat transfer performance can be greatly affected by the condensate that forms on the air-side louvered surface. The condensate may disrupt the air flow through the evaporator, and affect the heat transfer performance.

The literature survey reveals that significant advances have been made on the understanding of flow and heat transfer characteristics of louvered surfaces under dry conditions. Davenport (1980) showed that, through flow visualization study, the flow did not pass through louvers at low Reynolds numbers. At high Reynolds numbers, however, the flow became nearly parallel to louvers. Achaichia and Cowell (1988a) further confirmed that, through heat transfer tests on flat tube heat exchangers having louvered plate fins, the heat transfer coefficients approached those of duct flow at sufficiently low Reynolds numbers. At high Reynolds numbers, the heat transfer coefficients were parallel to those of the laminar boundary layer for a flat plate. Two types of flow were identified within the louvered plate fin array ? ¡duct directed flow¡ and ¡louver directed flow¡. The amount of either flow depended on the louver geometry such as fin pitch, louver pitch, louver angle as well as the Reynolds number. Following the pioneering study by Davenport (1980), many investigations have been made on the air-side heat transfer and pressure drop characteristics of louver fin ? flat tube heat exchangers both experimentally (Davenport, 1983; Webb and Jung, 1992; Sunden and Svantessen, 1992; Chang and Wang, 1996; Kim and Park, 1998; Kim and Cho, 2008) or numerically (Achaichia and Cowell, 1988b; Hiramatsu *et al*., 1990; Suga *et al.*, 1990; Kang and Choi, 1993; Achaichia *et al*., 1994; Lee *et al*., 1994; Tafti *et al*., 2000). Those studies generally confirmed the findings by Davenport (1980) and Achaichia and Cowell (1988a).

Compared to significant amount of studies conducted under dry conditions, very limited investigations have been performed under wet conditions. McLaughlin and Webb (2000a) identified two different types condensate formation on louvered surfaces ? one formed between louvers (louver bridging), and the other formed between fins (fin bridging). It was observed that louver bridging increased as the louver pitch decreased. Fin bridging increased as the fin pitch decreased. In a subsequent heat transfer study, McLaughlin and Webb (2000b) reported that, for the sample having rather short louver pitch (1.1 mm), significant decrease of heat transfer and pressure drop occurred under wet conditions compared to dry conditions, while much smaller change was observed for the sample having 1.3 mm louver pitch. It was speculated that, for small louver pitch, condensate bridged louvers and prohibited the formation of louver-directed flow, and subsequently heat transfer and pressure drop decreased. A hydrophilic coating increased the heat transfer by 25%, but showed insignificant impact on pressure drop. It was speculated that the coating helped drain the condensate both in louvers and in fins, and the increased pressure drop due to reduced louver bridging was compensated by the decreased pressure drop due to reduced fin bridging. Different from McLaughlin and Webb (2000b), Kim and Bullard (2002) reported increased pressure drop under wet conditions. It is speculated that louver bridging was not present in their sample due to large louver pitch (1.7mm), and the increased pressure drop is due to the condensate formed between fins.

There are some publications on the effect of inclination angle on the heat transfer and pressure drop characteristics of heat exchangers. However, most of them are for bare tube banks, high-fin tube banks and conventional finned tube heat exchangers (Groehn, 1983; Monheit and Freim, 1986; Chang *et al*., 1994). Literature reveals three studies for the effect of inclination angle of louvered surface heat exchangers. Osada *et al*. (1999) studied the effect of inclination on the wet surface heat transfer and pressure drop of louvered surface in a single fin column test section. It was reported that forward inclination improved the thermal performance. Kim *et al*. (2001) studied the effect of inclination angle on wet surface heat transfer and pressure drop of a brazed aluminum heat exchanger having 20 mm flow depth, 1.4 mm fin pitch, 1.7 mm louver pitch and 27 degree louver angle. Both forward and backward inclination was investigated. They reported that heat transfer coefficients were relatively insensitive to the inclination angle, while pressure drops increased as the inclination angle increased. Kim *et al*. (2002) extend the study to the effect of inlet humidity. The literature survey reveals that the effect of inclination on the heat transfer and pressure drop of louvered surfaces are very limited. Only one study by Kim *et al*. (2001) is relevant. However, they tested only one sample having 20 mm flow depth, 1.4 mm fin pitch, 1.7 mm louver pitch and 27 degree louver angle. In this study, three samples having different fin pitches (1.25, 1.5, 2.0 mm) were tested. The samples have relatively deep flow depth (34 mm) and small louver pitch (0.9 mm). The louver angle is 22 degree. Both forward and backward inclination ($-60^{o} \leq \beta \leq 60^{o}$) were investigated.

2. EXPERIMENT

Three heat exchangers having different fin pitches (1.25 mm, 1.5 mm, 2.0 mm) were tested. The samples consisted of 37 steps of louver fins brazed to flat tubes as illustrated in Fig. 1. The height and width of the samples were 254 mm and 385 mm respectively. Hydrophilic coating was not applied to the fin. The tube-side was circuited in a serpentine fashion with four tubes per pass. With this circuitry, tube-side flow was maintained turbulent.

Maintaining turbulent flow in the tube-side is important because the tube-side thermal resistance needs to be minimized for an accurate assessment of the airside heat transfer coefficient. In addition to this, tube-side flow mal-distribution problem, which might exist for a multiple tube configuration, was eliminated. Dimensional details of the flat tube and the louver fin are provided in Fig. 2 and Table 1.

Test apparatus consists of a suction-type wind tunnel, water circulation and control units, and a data acquisition system. The apparatus is situated in a constant temperature and humidity chamber. The airside inlet condition of the heat exchanger is maintained by controlling the chamber temperature and humidity. The inlet and outlet dry and wet bulb temperatures are measured by the sampling method as suggested in ASHRAE Standard 41.1 (1986). A diffusion baffle is installed behind the test sample to mix the outlet air. The water-side inlet condition is maintained by regulating the flow rate and the temperature out of the constant temperature bath situated outside of the chamber. Both the air and the water temperatures are measured by pre-calibrated RTDs (Pt-100Ω sensors). Their accuracies are $\pm$ 0.1^{o}C. The water flow rate is measured by a mass flow meter, whose accuracy is $\pm$ 0.0015 liter/s. The airside pressure drop across the heat exchanger is measured using a differential pressure transducer. The air flow rate is measured using a nozzle pressure difference according to ASHRAE Standard 41.2 (1987). The accuracy of the differential pressure transducers is $\pm$ 1.0 Pa. The wind tunnel is equipped with multiple nozzles, and an appropriate one is selected depending on the air velocity. The heat exchanger sample was installed in front of the wind tunnel using a rectangular duct as shown in Fig. 3. The duct was made of acryl plate for visualization of the condensate drainage from the sample. The duct height was determined from the inclination angle of the sample, and duct width was the same as the width of the sample. The duct length was 270 mm and 360 mm for $\pm$ 30° and $\pm$ 60° inclination respectively. For 0° inclination, the sample was installed right at the inlet of the wind tunnel without a duct.

During the experiment, the water inlet temperature was held at 5.5^{o}C. The chamber temperature was maintained at 27°C with 80% relative humidity. At this condition, the samples were maintained fully wet up to 2.0 m/s face air velocity. Experiments were conducted varying the frontal air velocity (at the face of the heat exchanger) from 0.5

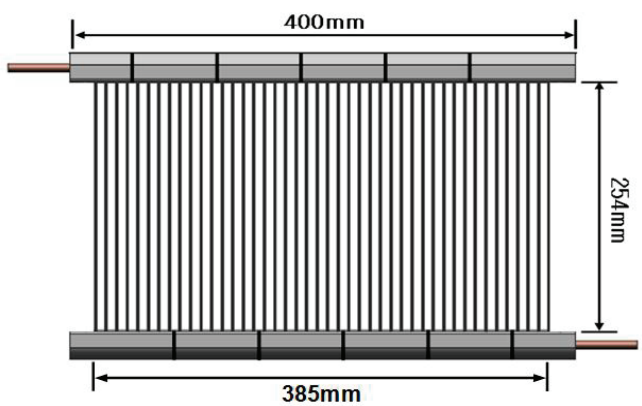

Fig.1. Schematic drawing of the sample heat exchanger

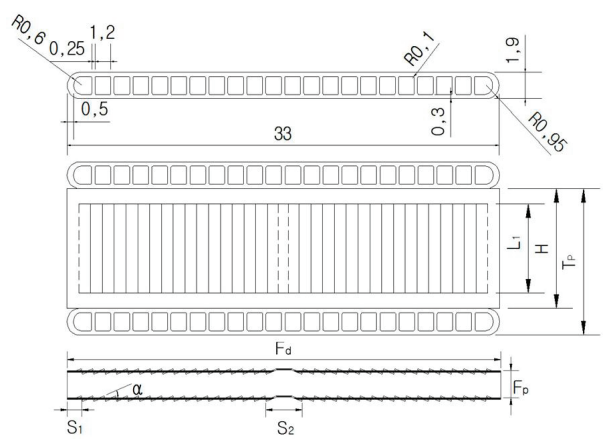

Fig. 2 Geometric details of the fin and tube

Table 1: Geometric dimensions of test samples

Sample	F_D (mm)	α (deg)	F_P (mm)	L_P (mm)	L_l (mm)	H (mm)	T_P (mm)	S_1 (mm)	S_2 (mm)
1	34	22	1.25	0.9	6.8	8.56	10.46	1.1	1.24
2	34	22	1.5	0.9	6.8	8.56	10.46	1.1	1.24
3	34	22	2.0	0.9	6.8	8.56	10.46	1.1	1.24

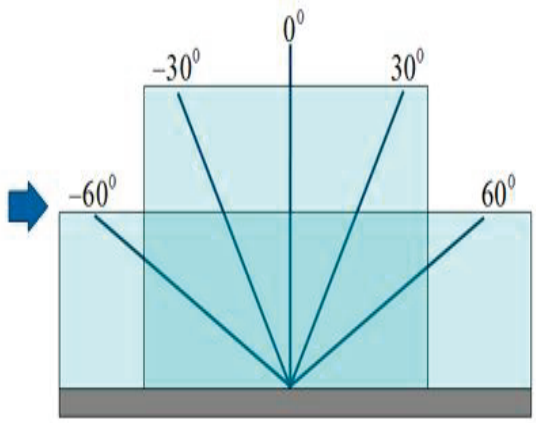

Fig. 3 Sketch showing the installation of the sample

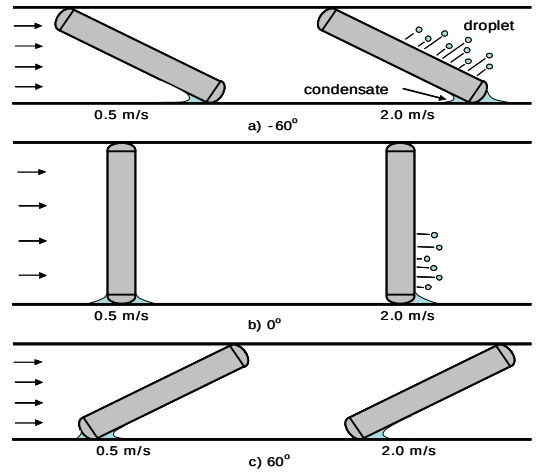

Fig. 4 Sketch of typical condensate drainage patterns

m/s to 2.0 m/s. One thing to note is that the frontal air velocity is different from the duct air velocity because the heat exchanger is installed at some inclination angle. For example, the duct air velocity is twice the frontal air velocity at 60° inclination. The energy balance between the air-side and the tube-side was within ± 2% for the air velocity large than 1.0 m/s. It increased to ± 5% at the air velocity of 0.5 m/s. All the data signals were collected and converted by a data acquisition system (a hybrid recorder). The data were then transmitted to a personal computer for further manipulation. An uncertainty analysis was conducted following ASHRAE Standard 41.5 (1975). The uncertainty on j factor was ± 12%, and that of f factor was ± 10%. The uncertainties decreased as the Reynolds number increased. The data reduction procedure of louvered fin under wet condition is well described by Kim *et al*. (2001), and is omitted here for limitation of the space. One thing to note is that, in the present setup, the measured pressure drop consisted of the pressure drop of the heat exchanger and that of the duct, where the sample was mounted. The duct pressure drop was separately measured, and was subtracted from the measured total pressure drop for reduction of f factor. The duct pressure drop consisted of 5~9% of the total pressure drop.

3. RESULTS AND DISCUSSIONS

3.1 Condensate Drainage Pattern

The condensate drainage patterns at three different inclination angles are illustrated in Fig. 4. The figure shows that drainage pattern is affected both by the inclination angle and by the flow velocity. At -60° forward inclination and low velocity, all the condensate drains toward inlet direction. As the velocity increases, part of the condensate starts to drain toward exit direction. As the velocity increases further, more condensate drains toward exit direction, and some condensates are blown off from the heat exchanger as droplets. At 0° inclination and low velocity, some condensate drains toward inlet direction, while most of the condensate drains toward exit direction. As velocity increases, all the condensate drains toward exit direction with some droplets blown off from the sample. At 60° backward inclination and low velocity, most of the condensate drains toward exit direction with minimal drainage toward inlet direction. As velocity increases, all the condensate drains toward exit direction. In this configuration, however, no blown-off droplets were observed. The fore-mentioned drainage pattern was approximately the same irrespective of the fin pitch.

3.2 Heat Transfer and Pressure Drop

The j and f factors at different inclination angles are shown in Fig. 5 for three different fin pitches. Fig. 5 shows that j factors are relatively insensitive to the inclination angle. Similar trend was reported by Kim *et al*. (2001) for the louvered surface having 1.4 mm fin pitch and 20 mm flow depth. At 1.25 mm fin pitch, however, slight increase of j factor at forward inclination is noticed. As noted by McLaughlin and Webb (2000a), fin bridging of the condensate increases as the fin pitch decreases. The fin-bridged condensate blocks the air flow thorough the test sample, increases the pressure drop and decreases the heat transfer. It appears that, at 1.25 mm fin pitch, less fin bridging occurred at forward inclination compared with backward inclination. The accompanying f factor curves of F_p = 1.25

mm in Fig. 6, where forward inclination f factors are lower than backward inclination values, further confirm decreased fin bridging at forward inclination. For larger fin pitches of 1.5 and 2.0 mm, Fig. 6 show that the f factor difference between forward and backward inclination is negligible. It appears that, at larger fin pitch, the amount of fin bridging decreased, and f factors are not affected by the inclination direction.

Fig. 5 shows that f factor increases as the inclination angle increases, with significant increase from 30° to 60°. For 1.5 mm fin pitch, the f factor increase was 8% and 71% at 30° and 60° respectively. For 2.0 mm fin pitch, the increase was 5% and 101%. The Reynolds number of the present study is defined using $V_{max,}$ which is the velocity based on the minimum flow area of the frontal surface. Thus, even at the same Reynolds number, the duct air velocity (horizontal velocity to the sample) increases with the inclination angle. In addition, in a inclined sample, it is not likely that the flow will exactly follow the deflected flow path. If this is the case, the actual V_{max} will increase as the inclination angle increases, and the increase will be more significant at larger fin pitch. Comparison of three graphs in Fig. 5 indeed shows that the f factor difference between 0° to 60° increases as the fin pitch increases. In Fig. 6, the same data are re-plotted to show the effect of fin pitch at three different inclination angles. In Fig. 6, only backward inclination data are shown because not much difference exist between backward and forward inclination data. Fig. 6 shows that j factors are approximately the same independent of the fin pitch, although slight increase at 2.0 mm fin pitch is noticed. The friction factors are approximately the same for 1.5 mm and 2.0 mm fin pitch, while they significantly increase at 1.25 mm fin pitch. Significant fin bridging of the condensate at 1.25 mm fin pitch appears to have caused large f factors.

3.3 Comparison with Dry Surface Data

In Fig. 7, the present wet surface j and f factors are compared with dry surface j and f factors (Kim *et al.*, 2008). Fig. 7 shows that wet surface j factors are significantly lower than dry surface j factors, while f factors are approximately the same (with an exception of 1.25 mm fin pitch). The j factor decrease for the wet surface was 101%, 64% and 62% for 1.25, 1.5 and 2.0 mm fin pitch respectively. The decrease of the j factor for the wet surface is due to the bridging of the louvers by condensate as noted by McLaughlin and Webb (2001a). The air bypasses the condensate-bridged louvers, and the flow becomes duct-directed. Even for the dry surface, the flow becomes duct-directed at low air velocity. Fig. 7 shows that, at a very low Reynolds number, wet surface j factors are approximately the same as those of the dry surface, suggesting duct-directed flow for both cases. If the flow becomes duct-directed by louver-bridging, f factors should also decrease compared to dry values. However, Fig. 7 shows that wet surface f factors are approximately the same as those of dry surface. The reason may be attributed to other condensates, which are located between fins. Those fin-bridged condensates add additional pressure drop. The decreased pressure drop by louver-bridged condensate appears to be compensated by the increased pressure drop by fin-bridged condensate. At 1.25 mm fin pitch, the wet surface f factors are 68% higher than dry surface values. Excessive fin bridging at the small fin pitch appears to have caused significant pressure drop for the wet surface.

4. CONCLUSIONS

In this study, the effect of inclination angle on the heat transfer and pressure drop characteristics of brazed aluminum heat exchangers is experimentally investigated under wet conditions. Three samples having different fin pitches (1.25, 1.5 and 2.0 mm) were tested. The louver pitch of the samples was 0.9 mm. Listed below are major findings.

1) Except for 1.25 mm fin pitch, the effect of inclination angle on j factor is negligible. For 1.25 mm fin pitch, slight increase of j factor at forward inclination is noticed. Increased condensate between fins at the small fin pitch appears to be responsible.
2) The f factor increases as the inclination angle increases, with significant increase from 30° to 60°.
3) The j factors are approximately the same independent of the fin pitch. The f factors are approximately the same for 1.5 mm and 2.0 mm fin pitch, while they significantly increases at 1.25 mm fin pitch. Significant fin bridging of the condensate at 1.25 mm fin pitch appears to have caused large f factors.
4) Wet surface j factors are significantly lower than dry surface j factors, while f factors are approximately the same. The decrease of the j factor for the wet surface appears to be due to the bridging of the louvers by condensate. For the f factor, the decreased pressure drop by louver-bridged condensate appears to be compensated by the increased pressure drop by fin-bridged condensate.

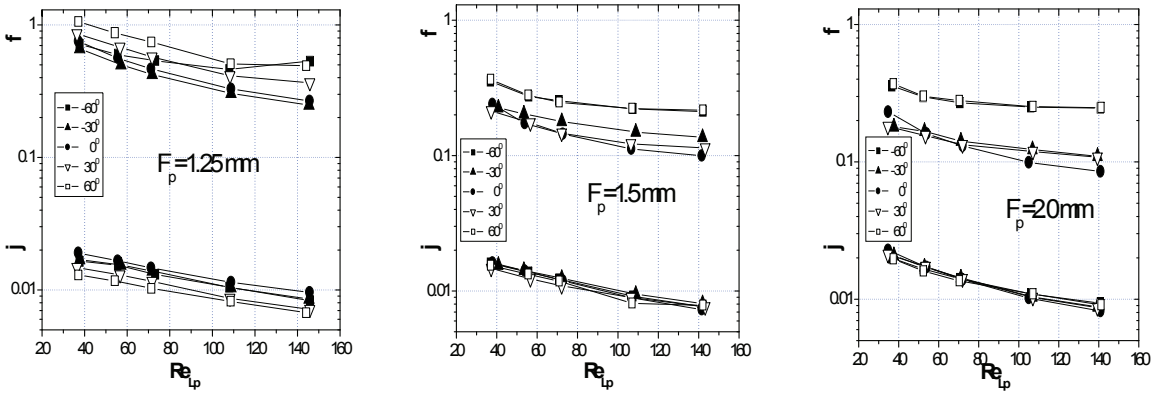

Fig. 5 Effect of inclination angle on j and f factors

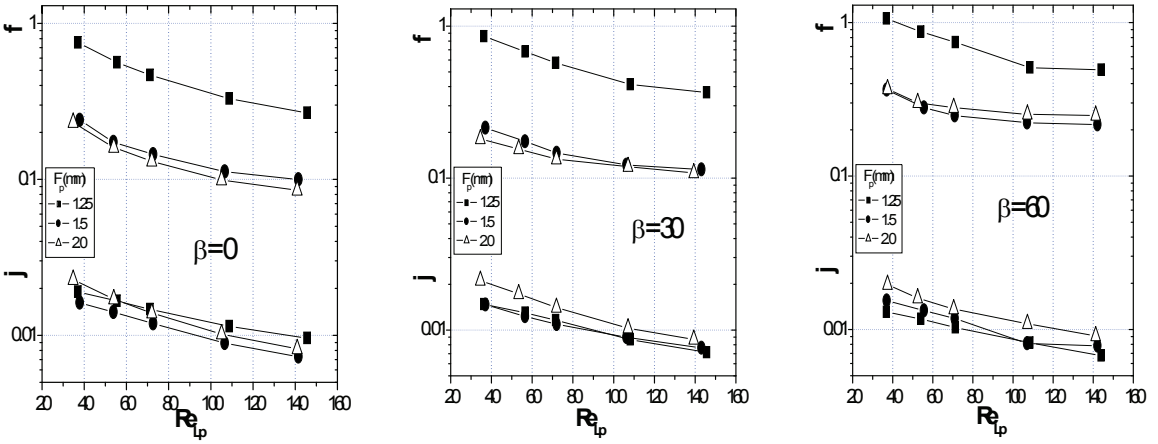

Fig. 6 Effect of fin pitch on j and f factors

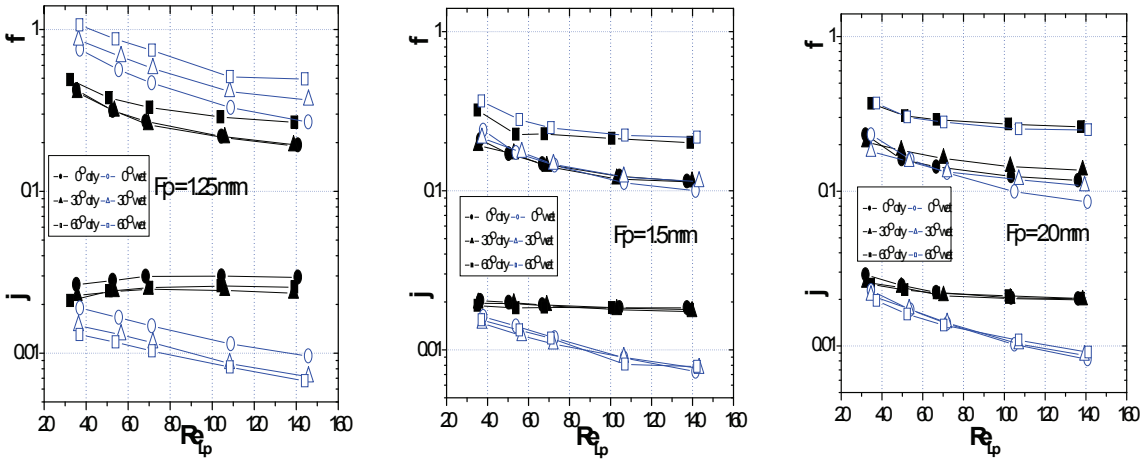

Fig. 7 Comparison of wet and dry j and f factors

NOMENCLATURE

F_p	fin pitch	(mm)	f	friction factor	(-)
H	fin height	(mm)	h	heat transfer coefficient	(W/m^2 K)
j	Colburn j factor	(-)	L_l	louver length	(mm)
L_p	louver pitch	(mm)	Re_{Lp}	Reynolds number based on L_p	(-)
S_1	redirection louver pitch at inlet and exit of the fin	(mm)	S_2	redirection louver pitch at center of the fin	(mm)
T_p	tube pitch	(mm)	α	louver angle	(-)
β	inclination angle	(-)			

REFERENCES

Achaichia, A., Cowell, T.A., 1988b, A Finite Difference Analysis of Fully Developed Periodic Laminar Flow in Inclined Louvered Arrays, *Proceedings of Second UK National Heat Transfer Conference,* Glasgow: p. 883-888.

Achaichia, A., Cowell, T.A., 1988a, Heat Transfer and Pressure Drop Characteristics of Flat tube and Louvered Plate Fin Surfaces, *Exp. Thermal Fluid Science*, vol. 1: p. 147-157.

Achaichia, A., Heikal, M.R., Sulaimna, Y., Cowell, T.A., 1994, Numerical Investigation of Flow and Friction in Louver Fin Arrays, *Proceedings of the Tenth International Heat Transfer Conference*, vol. 4: p.333-338.

ASHRAE Standard 41.1, 1986, Standard Method for Temperature Measurement, ASHRAE.

ASHRAE Standard 41.2, 1987, Standard Method for Laboratory Air-Flow Measurement, ASHRAE.

ASHRAE Standard 41.5, 1975, Standard Measurement Guide, Engineering Analysis of Experimental Data, ASHRAE.

Chang, Y.-J., Wang, C.-C., 1996, Air-Side Performance of Brazed Aluminum Heat Exchangers, *J. Enhanced Heat Transfer*, vol. 3, no. 1: p. 15-28.

Chang, W.R., Wang, C.C., Chang, Y.J., 1994, Effect of an Inclination Angle on the Heat Transfer and Pressure Drop Characteristics of a Wavy Finned-Tube Heat Exchanger, *ASHRAE Trans.*, vol. 100, no. 2: p. 826-832.

Davenport, C.J., 1980, Heat Transfer and Fluid Flow in Louvered Triangular Ducts, PhD. Thesis, Lanchester Polytechnic, U. K.

Davenport, C.J., 1983, Correlation of Heat Transfer and Flow Friction Characteristics of Louvered Fin, *AIChE Symp. Ser.* vol. 79: p. 19-27.

Groehn, H.G., 1983, Heat Transfer and Flow Resistance of Yawed Tube Bundle Heat Exchangers, Heat Exchanger Theory and Practice, Hemisphere: p. 299-310.

Hiramatsu, M., Ishimaru, T., Matsuzaki, K., 1990, Research on Fins for Air-Conditioning Heat Exchangers (First Report, Numerical Analysis of Heat Transfer on Louvered Fins),¡ *JSME International Journal, Series II,* vol. 33, no. 4, Paper No. 88-1254A.

Kang, C.S., Choi, T.M., 1993, A Basic Study on Air Flow Characteristics in Louvered Fins, *KSME J.*, vol. 17, no. 5: p.1276-1293.

Kays, W.M., London, A.L., 1984, Compact Heat Exchangers, McGraw Hill Pub.

Kim, D.-Y., Cho, J.-P., Kim, N.-H., Park, N.-H., Hwang, J.-H., 2008, Airside Performance of Aluminum Heat Exchangers at Different Inclination Angles, *J. SAREK*, vol. 20, no. 3: p. 182-189

Kim, M.-H., Bullard, C.-W., 2002, Airside Performance of Brazed Aluminum Heat Exchanger under Dehumidifying Conditions, *Int. J. Refrigeration*, vol. 25: p. 924-934.

Kim, M.-H., Park, W.-Y., 1998, Air-Side Heat Transfer and Pressure Drop Characteristics of Louvered Fin Heat Exchangers, *Proceedings of the KSME '98 fall conference*: p.123-128

Kim, M.-H., Song, S., Bullard, C.W., 2002, Effect of Inlet Humidity Condition on the Airside Performance of an Inclined Brazed Aluminum Evaporator,¡ *Int. J. Refrigeration*, vol. 25: p. 611-620.

Kim, M.-H., Youn, B., Bullard, C.W., 2001, Effect of Inclination on the Airside Performance of a Brazed Aluminum Heat Exchanger under Dry and Wet Conditions, *Int. J. Heat Mass Transfer,* vol. 44: p. 4613-4623.

Kim N.-H., Cho, J.-P., 2008, Airside Performance of Louver-Finned Flat Aluminum Heat Exchangers at a Low Velocity Region, printing in *Heat and Mass Transfer*.

Lee, K.S., Jeon, C.D., Lee, J.H., 1994, Study of Flow Structure and Pressure Drop Characteristics in Louvered-Fin Type Heat Exchanger, *J. SAREK*, vol. 6, no. 2: p. 140-154.

McLaughlin, W.J., Webb, R.L., 2000a, Condensate Drainage and Retention in Louver Fin Automotive Evaporators, *SAE Technical Paper Series*, 2000-01-0575.

McLaughlin, W.J., Webb, R.L., 2000b, Wet Airside Performance of Louver Fin Automotive Evaporators, *SAE Technical Paper Series*, 2000-01-0574.

Monheit, M., Freim, J., 1986, Effect of Tube Bank Inclination on the Thermal Hydraulic Performance of Air Cooled Heat Exchangers, *Proceedings of 8th Int. Heat Transfer Conf.*: p. 2727-2732.

Osada, H., Aoki, H., Ohara, T., Kuroyanagi, K., 1999, Experimental Analysis for Enhancing Automotive Evaporator Fin Performance, *Proceedings of the International Conference on Compact Heat Exchangers and Enhancement Technologies for the Process Industries*: p. 439-445.

Suga, K., Aoki, H., Shingawa, T., 1990, Numerical Analysis on Two Dimensional Flow and Heat Transfer on Louvered Fins Using Overlaid Grids, *JSME International Journal*, vol. 33: p. 122-127.

Sunden, B., Svantessen, J., 1992, Correlation of j and f Factors for Multi-Louvered Heat Transfer Surfaces, *Proceedings of Third UK National Heat Transfer Conference*: p. 805-811.

Tafti, D.K., Wang, G., Lin, W., 2000, Flow Transition in a Multi-Louvered Fin Array, *Int. J. Heat Mass Transfer*, vol. 43: p. 901-919.

Webb, R.L., Jung, S.-H., 1992, Air-Side Performance of Enhanced Brazed Aluminum Heat Exchangers, *ASHRAE Trans.*, vol. 98, no. 2: p. 391-410.

Webb, R L.,Lee, H., 2001, Brazed Aluminum Heat Exchangers for Residential Air-Conditioning, *J. Enhanced Heat Transfer*, vol. 8: p.1-14.