Purdue University
Purdue e-Pubs

ECE Technical Reports | Electrical and Computer Engineering

8-1-1991

DYNAMICAL VARIABLE STRUCTURE CONTROL OF A HELICOPTER IN VERTICAL FLIGHT

Hebertt Sira-Ramirez
Universidad de Los Andes

Mohamed Zribi
Purdue University School of Electrical Engineering

Shaheen Ahmad
Purdue University School of Electrical Engineering

Follow this and additional works at: http://docs.lib.purdue.edu/ecetr

Sira-Ramirez, Hebertt; Zribi, Mohamed; and Ahmad, Shaheen, "DYNAMICAL VARIABLE STRUCTURE CONTROL OF A HELICOPTER IN VERTICAL FLIGHT" (1991). *ECE Technical Reports.* Paper 318.
http://docs.lib.purdue.edu/ecetr/318

This document has been made available through Purdue e-Pubs, a service of the Purdue University Libraries. Please contact epubs@purdue.edu for additional information.

Dynamical Variable Structure Control of a Helicopter in Vertical Flight

Hebertt Sira-Ramirez
Mohamed Zribi
Shaheen Ahmad

TR-EE 91-36
August 1991

DYNAMICAL VARIABLE STRUCTURE CONTROL OF A HELICOPTER IN VERTICAL FLIGHT

Hebertt Sira-Ramírez
Departamento Sistemas de Control
Escuela de Ingeniería de Sistemas
Universidad de Los Andes
Mérida-VENEZUELA.

Mohamed Zribi, Shaheen Ahmad
Real-time Robot Control Laboratory
School of Electrical Engineering
Purdue University
West Lafayette, IN 47907-0501
U.S.A.

Abstract

In this article, a dynamical multivariable discontinuous feedback control strategy of the sliding mode type is proposed for the altitude stabilization of a nonlinear helicopter model in vertical flight. While retaining the basic robustness features associated to sliding mode control policies, the proposed approach also results in smoothed out (i.e., non-chattering) input trajectories and controlled state variable responses.

Key Words: Helicopter Control, Nonlinear Systems, Sliding Regimes, Variable Structure Systems.

Preferred Author's Address. Dr. Hebertt Sira-Ramirez, Avenida Las Américas, Edificio Residencias "El Roble", Piso 6, Apartamento D-6, Mérida 5101, Venezuela.

This work was partially supported by the Consejo de Desarrollo Científico, Humanístico and Tecnológico of the Universidad de Los Andes (Mérida-Venezuela), under Research Grant 1-325-90 and by a Grant from Shin Meiwa Industries Ltd., (Japan).

1. INTRODUCTION

Using techniques derived from the ***differential algebraic*** approach to control theory (see Fliess [1]-[2]), dynarnical sliding mode control of nonlinear systems has been recently introduced for the ***chattering-free*** variable structure control regulation of nonlinear single-input single-output systems (see Sira-Ramirez [3]-[5] and, for seminal ideas, see Fliess and Messager [6]). In Sira-Ramirez ***et al*** [7], the technique was shown to possess particularly desirable features for the robust solution of stabilization and tracking problems defined on mechanical systems, such as flexible joint robotic manipulators.

In this paper we extend the developments in [3] and [7] to the case of ***decouplable multivariable nonlinear systems,*** and apply them to the altitude control of a nonlinear helicopter model under hovering conditions. The main rotor collective pitch and the engine throttle input were used as control variables for height stabilization around a desired constant reference. The nonlinear dynamical system equations, which describe the vertical motions of the helicopter, were identified from an experimental flight control facility which consists of an X-Cell50 radio-controlled model helicopter, powered by a 0.5 in3 two-cycle Webra gasoline engine (see Pallet et al [8]). A state coordinate transformation of the nonlinear system dynamics into Isidori's Normal Canonical Form is shown to yield a, decouplable, exactly linearizable multivariable system. On such a transformed system, ***static sliding mode*** control techniques should not be directly applied, as they result in undesirable chattering of the collective pitch and engine throttle inputs. Input chattering would also result in unnecessary excitation of unmodelled dynamics and high frequency vibrations of the airframe and propulsion systems. The advantageous robusmess features of the sliding mode control approach are made compatible with the mechanical limitations of the system through an ***extended system*** model (see Nijmeijer and Van der Schaft [9]) on which an ***auxiliary static sliding mode controller*** design is performed via well-known techniques (Sira-Ramirez [10]). The obtained static design is then re-interpreted, in terms of the original control input variables, as a ***dynamical sliding mode feedback controller.*** The chattering state responses and chattering inputs trajectories, otherwise characteristic of sliding mode control techniques, are thus entirely confined to the state space of the dynamic controller and effectively eliminated from the system stiate space, and control inputs. As a result, the generated input signal and the corresponding state trajectory response are sufficiently smoothed by the inherent integration. Dynamical feedback strategies, using pulse-width-modulation, sliding mode control and exact linearization techniques are also discussed in Sira-Ramirez [11]-[13], for a variety of aerospace control problems.

Modem linear controller design methodologies have been used in the past for helicopter altitude regulation problems. Such techniques include H_∞ optimal control, linear quadratic regulator design and eigenvalue-eigenvector assignment techniques. Reviews of such approaches are contained in Garrad and Low [14] and in Mannes *et al* [15] where the reader is referred for more thorough details on results. Nonlinear controller design for helicopters have been addressed in the pioneering work of Hunt, Su and Mayer [16] from a feedback linearization, or exact linearization, viewpoint. Prasad *et al* [17], Mittal *et al* [18] approached the problem from an adaptive control viewpoint by allowing parametric uncertainty in the model. Miniature helicopter control problems were also discussed in Furuta *et al* [19] and Kienitz et *al* [20]. The work of Pallet *et al* [21] served *as* the basis for our understanding of the helicopter model.

Section 2 of this article briefly reviews the background required for treating multivariable sliding mode control of nonlinear systems and proposes, both, a static and dynamical sliding mode control approach for feedback regulation of decouplable nonlinear systems. The advantages of dynamical sliding mode control over statically generated control inputs are also discussed in this section. Section 3 presents a nonlinear helicopter model and the corresponding dynamical sliding mode controller design for altitude and the rotor pitch angle regulation. In section 3, computer generated simulations are presented and discussed. Section 4 collects the conclusions and suggestions for further research.

2. DYNAMICAL SLIDING MODE CONTROL OF MULTIVARIABLE NONLINEAR SYSTEMS.

Sliding mode control of dynamical multivariable nonlinear systems has been the subject of a number of research and survey articles. A comprehensive tutorial is given in DeCarlo *et al* , [22]. *A* recent, and rather complete contribution in this area, was presented by Kwatny [23]. The problem of sliding mode controlled tracking in multivariable nonlinear systems was examined in Liu and Yuan [24]. The reader is referred to a recently translated book by Utkin [25] and also to Slotine and Sastry [26], Slotine and Li [27], Fernandez *et al* [28] and Sira-Ramirez [29], for more details and applications. In all of the above referred works, *static* sliding mode controllers are proposed. In this article we concentrate and exploit the advantages of *dynamical* sliding mode control for the class of decouplable exactly linearizable systems.

2.1 Normal Canonical Form of Multivariable Nonlinear Systems

The following paragraphs closely follow the presentation given in Sastry and Isidori [30]. These results are presented here only for the sake of making the article as self-contained as possible.

Consider a dynamical multivariable nonlinear controlled system of the form:

$$\begin{aligned} \dot{x} &= f(x) + G(x)u \\ y &= h(x) \end{aligned} \tag{2.1}$$

where $x \in R^n$, $u \in R^m$ and $y \in R^m$. The vector field $f(x)$ and the linearly independent columns $g_i(x)$ of the n x m matrix $G(x)$ are assumed to be C^∞ functions of x.

Let $L_f h_i$ denote the directional derivative of a scalar function h_i with respect to the vector field f. We can recursively define $L_f(L_f^{i-1}h) =: L_f^i h$ for $i = 1,2,\ldots$, with $L_f^0 h = h$. Similarly, $L_{g_j}L_f h$ denotes $L_{g_j}(L_f h)$.

We define the ***vector relative degree*** r of the system (2.1) as an ordered set of m integers $r = \{r_1, r_2, \ldots, r_m\}$, with each r_i associated to the component y_i, of the output vector y, as the minimum number of times, that y_i has to be differentiated, with respect to time, so that at least one of the components u_j, of the input vector u, explicitly appears in the derivative. If the same r_i's hold throughout the state space, i.e., if they hold independently of the values of the state, then the system is said to have ***strong relative degree*** r. Otherwise, the validity of the results is only local, or confined to regions bounded away from such singularities. This is the case in our example.

In more techical terms, the vector relative degree of the system (2.1) is defined, following Isidori [31], as follows:

System (2.1) is said to have a ***vector relative degree*** r at a point x^0 in R^n if r_i ($i=1,2,\ldots,m$) is such that, locally in an open neighborhood $N(x^0)$ of x^0:

$L_{g_j} L_f^k h_i(x) = 0$, for all $j = 1,\ldots,m$, for all $k < r_i - 1$, and all $x \in N(x^0) \subset R^n$

$L_{g_j} L_f^{r_i - 1} h_i(x^0) \neq 0$, for at least one $j \in \{1,2\ldots,m\}$

Under rather mild assumptions (namely, involutivity of the column vectors constituting the nonsingular matrix G(x)), it has been shown (see [31]) that the following local diffeomorphic state coordinate transformation :

$$(\zeta,\eta) = Z(x) = \left[h_1(x),\ L_f h_1(x),\ldots,L_f^{r_1-1}h_1(x),h_2(x),\ldots,h_m(x),\ldots,L_f^{r_m-1}(x),\ \eta(x)\right]^T$$

takes the system (2.1) into ***Normal Canonical Form*** (with η having no particularly special structure except being independent of the rest of the coordinates and also, possibly, for being such that $[\partial\eta/\partial x]G(x) = 0$ for all x) :

$$\begin{aligned} \dot{\zeta} &= F\zeta + \tilde{b}(\zeta,\eta) + \tilde{A}(\zeta,\eta)\,u \\ \dot{\eta} &= q(\zeta,\eta) \\ y &= C\zeta \end{aligned} \tag{2.2}$$

where the vector (ζ,η) is an n-dimensional composite vector. The component vector ζ is constituted by m r_i -dimensional subvectors ζ_i (i =1,2,...,m), and the vector η consists of m $n_i - r_i$ dimensional subvectors η_i, with $\Sigma\, n_i = n$. The matrix C picks up, for every row component y_i of y, the first component of the subvector ζ_i. The matrices in (2.2) have the folllowing structure:

$$F = \begin{bmatrix} F_1 & 0 & \cdots & 0 \\ 0 & F_2 & \cdots & 0 \\ \vdots & \vdots & \ddots & \vdots \\ 0 & 0 & \cdots & F_m \end{bmatrix};\quad \tilde{b} = \begin{bmatrix} \tilde{b}_1 \\ \tilde{b}_2 \\ \vdots \\ \tilde{b}_m \end{bmatrix};$$

$$\tilde{A} = \begin{bmatrix} \tilde{A}_1 & 0 & \cdots & 0 \\ 0 & \tilde{A}_2 & \cdots & 0 \\ \vdots & \vdots & \ddots & \vdots \\ 0 & 0 & \cdots & \tilde{A}_m \end{bmatrix};\quad C = \begin{bmatrix} \tilde{c}_1 & 0 & \cdots & 0 \\ 0 & \tilde{c}_2 & \cdots & 0 \\ \vdots & \vdots & \ddots & \vdots \\ 0 & 0 & \cdots & \tilde{c}_m \end{bmatrix} \tag{2.3}$$

With :

$$F_i = \begin{bmatrix} 0 & 1 & 0 & \cdots & 0 \\ 0 & 0 & 1 & \cdots & 0 \\ \vdots & \vdots & \vdots & \ddots & 0 \\ 0 & 0 & 0 & \cdots & 1 \\ 0 & 0 & 0 & 0 & 0 \end{bmatrix} \quad ; \qquad \tilde{b}_i(\zeta,\eta) = \begin{bmatrix} 0 \\ 0 \\ \vdots \\ L_f^{r_i} h_i[Z^{-1}(\zeta,\eta)] \end{bmatrix} ;$$

$$\tilde{A}_i(\zeta,\eta) = \begin{bmatrix} 0 & 0 & \cdots & 0 \\ 0 & 0 & \cdots & 0 \\ \vdots & \vdots & & \vdots \\ L_{g_1} L_f^{r_i-1} h_i[Z^{-1}(\zeta,\eta)] & L_{g_2} L_f^{r_i-1} h_i[Z^{-1}(\zeta,\eta)] & \cdots & L_{g_m} L_f^{r_i-1} h_i[Z^{-1}(\zeta,\eta)] \end{bmatrix}$$

$$c_i = [1\ 0\ 0 \cdots 0]$$

(2.4)

We associate the transformed differential equations, corresponding to these subvectors, and the output components, as follows :

$$\begin{aligned} \dot{\zeta}_i &= \tilde{b}_i(\zeta,\eta) + \tilde{A}_i(\zeta,\eta)\, u \\ \dot{\eta}_i &= q_i(\zeta,\eta) \qquad ; \quad i = 1,2,\ldots,m \\ y_i &= c_i\, \zeta_i \end{aligned} \tag{2.5}$$

which, in a more explicit manner reads as:

$$\begin{aligned} \zeta_{i1} &= \zeta_{i2} \\ \dot{\zeta}_{i2} &= \zeta_{i3} \\ &\cdots \\ \zeta_{i(r_i-1)} &= \zeta_{ir_i} \\ \dot{\zeta}_{ir_i} &= L_f^{r_i} h_i[Z^{-1}(\zeta,\eta)] + \sum_{j=1}^{m} L_{g_j} L_f^{r_i-1} h_i[Z^{-1}(\zeta,\eta)] u_j \qquad ; \quad i = 1,2,\ldots,m \\ \dot{\eta}_{ki} &= q_{ki}(\zeta,\eta) \qquad ; \quad k = 1,2,\ldots,n_i-r_i \\ y_i &= \zeta_{i1} \end{aligned} \tag{2.6}$$

It follows from the relative degree assumption that, for each i, at least one of the terms in the sum appearing in **(2.6)** is not identically zero locally in R^n, so that every output is, somehow, **connected** to some input through nonlinear state-dependent gains and integrators. Notice that, for every i, the variable $\zeta_{i\,r_i}$ represents the r_i-1 th derivative of the output component y_i. Thus, the differential equation for $\zeta_{i\,r_i}$, above, actually represents a local, state-dependent, dynarnical relation between the i-th output component y_i and the input vector **components** u_j. i.e.,

$$y^{(r_i)} = L_f^{r_i} h_i[Z^{-1}(\zeta,\eta)] + \sum_{j=1}^{m} L_{g_j} L_f^{r_i-1} h_i[Z^{-1}(\zeta,\eta)]u_j \tag{2.7}$$

One can then rewrite the set of equations **(2.7)** in vector notation as :

$$\begin{bmatrix} y^{(r_1)} \\ y^{(r_2)} \\ \vdots \\ y^{(r_m)} \end{bmatrix} = b(\zeta, \eta) + A(\zeta,\eta)u \tag{2.8}$$

where:

$$b(\zeta,\eta) = \begin{bmatrix} L_f^{r_1} h_1[Z^{-1}(\zeta,\eta)] \\ \vdots \\ L_f^{r_m} h_m[Z^{-1}(\zeta,\eta)] \end{bmatrix};$$

$$A(\zeta,\eta) = \begin{bmatrix} L_{g_1} L_f^{r_1-1} h_1[Z^{-1}(\zeta,\eta)] & \cdots & L_{g_m} L_f^{r_1-1} h_1[Z^{-1}(\zeta,\eta)] \\ \vdots & L_{g_i} L_f^{r_i-1} h_j[Z^{-1}(\zeta,\eta)] & \vdots \\ L_{g_1} L_f^{r_m-1} h_m[Z^{-1}(\zeta,\eta)] & \cdots & L_{g_m} L_f^{r_m-1} h_m[Z^{-1}(\zeta,\eta)] \end{bmatrix} \tag{2.9}$$

If the matrix $A(\zeta,\eta)$ is locally non-singular, the system is said to be ***linearly decouplable by static state feedback.*** Indeed, a static feedback control law of the form :

$$u = - A^{-1}(\zeta,\eta)\left[b(\zeta,\eta) - v\right] \tag{2.10}$$

renders **the** closed loop system into an input-output **decoupled** linear system,

$$\begin{bmatrix} y^{(r_1)} \\ y^{(r_2)} \\ \vdots \\ y^{(r_m)} \end{bmatrix} = \begin{bmatrix} v_1 \\ v_2 \\ \vdots \\ v_m \end{bmatrix} \tag{2.11}$$

Notice that the feedback control law (2.10) locally renders the variables η completely unobservable. The stability features of this unobservable subsystem are crucial for the validity of (2.10) to become part of an effectively stabilizing feedback control policy (see [31] for more details). In the next section we consider the class of systems in which the variables η are not present in the transformed expressions.

2.2 Static Sliding Mode Control of Linearizable Multivariable Nonlinear Systems

For the class of systems we will be dealing with, we assume that the relative degree vector r is of the: form $\{n_1,\ldots,n_m\}$. This means that no components of the form η_i exist in the normal canonical form (2.4) and, hence, the system is assumed to be ***exactly linearizable by static state feedback..*** It should be pointed out that, generally speaking, mechanical systems, such as robotic manipulators, automobile suspension systems, thrust and spin-wheel controlled spacecraft, VTOL aircraft and, certainly, helicopters, belong to this class of multivariable systems. Sliding mode control ,applications for some of these systems may be found in Slotine and Sastry [26], Sira-Ramirez and Spong [32], Dwyer and Sira-Ramirez [33] and Sira-Ramirez and Dwyer [34] and [7]. The underlying feature in these works is the presence of undesirable chattering at the input and state variables. Traditionally, the chattering phenomenon has been alleviated by replacing discontinuities in the switching actions by continuous high-gain actuators in various configurations, including an adaptive: gain scheme (see[27] and also Utkin [35], and Marino [36] for details). In the next section, we propose a dynamical feedback approach to effectively eliminate the chattering motions at the feedback generated inputs for the system.

Remark The results presented in this article extend to locally partially linearizable systems, even if they are not decouplable by static state feedback, provided they are of the ***minimum phase*** type (see Isidori and Moog [37] for the several definitions of minimum phase systems associated with the multivariable case). We do not explore the issues associated with the partially linearizable case in this article.

Suppose it is desired to locally stabilize the output vector y of system (2.1) to a constant vector y_d. It is easy to see from (2.11) that this can be done by prescribing the input variables in the vector v as suitable (decoupled) linear combinations of the output variables time derivatives. This results in locally asymptotically stable solutions of the involved, linear, time-invariant, system of differential equations, excited only by initial conditions and the reference vector. Thus, provided full state feedback is allowed for the synthesis of the required output derivatives, and if the unobservable subsystem, if any, is asymptotically stable, the stabilizing approach only requires linear design techniques of the pole placement type. We would like, however, to synthesize a more robust control policy of the variable structure type leading to sliding mode stabilization of the output trajectories around the desired reference value y_d.

We prescribe an auxiliary output function, or ***sliding surface coordinate function*** $\sigma_i : R^n \rightarrow R$, for each subsystem (2.6). In terms of the transformed coordinates, such a function takes the form :

$$\sigma_i[Z^{-1}(\zeta)] = \alpha_{i1}(\zeta_{i1}-y_{id}) + \sum_{j=1}^{n_i-1} \alpha_{i(j+1)}\zeta_{i(j+1)} =: \alpha_i^T \zeta_i - \alpha_{i1}y_{id} \quad ; \quad \alpha_{i\,n_i} = 1 \tag{2.12}$$

In original coordinates, and in terms of output derivatives, such an auxiliary output function exhibits a more suggestive form:

$$\sigma_i(x) = \alpha_{i1}[h_i(x) - y_{id}] + \sum_{j=1}^{n_i-1} \alpha_{i\,(j+1)}L_f^j h_i(x) = \alpha_{i1}(y_i - y_{id}) + \sum_{j=1}^{n_i-1} \alpha_{i(j+1)}y_i^{(j)} \tag{2.13}$$

The coefficients α_{ij} are chosen in such a way that the following polynomial, in the complex variable s, is Hurwitz for each i :

$$p_i(s) = \alpha_{i1} + \sum_{j=1}^{n_i-1} \alpha_{i\,(j+1)}s^j \tag{2.14}$$

Evidently, if $\sigma_i(x)$ becomes locally identically zero, thanks to a suitable variable structure control policy, then, from (2.12) and (2.6), one obtains the following ideal exponentially stable linearized dynamics for the i-th subsystem :

$$
\begin{aligned}
\dot{\zeta}_{i1} &= \zeta_{i2} \\
\dot{\zeta}_{i2} &= \zeta_{i3} \\
&\cdots \\
\dot{\zeta}_{i(n_i-1)} &= \zeta_{in_i} = -\alpha_{i1}(\zeta_{i1}-y_{id}) - \alpha_{i2}\zeta_{i2} - \dots - \alpha_{i\,(n_i-1)}\zeta_{i\,(n_i-1)} \qquad ;\ i = 1,2,\dots,m \\
y_i &= \zeta_{i1}
\end{aligned}
\tag{2.15}
$$

In terms of the i-th output variable and its time derivatives (2.15) is rewritten as:

$$
y_i^{(n_i-1)} = -\alpha_{i1}(y_i-y_{id}) - \sum_{j=1}^{n_i-2} \alpha_{i(j+1)} y_i^{(j)} \tag{2.16}
$$

After the sliding mode behavior is locally ***collectively*** achieved, i.e., when $\sigma_i(x) = 0$ for all i, one obtains exponential asymptotic stabilization toward the desired constant reference value of the output. Needless to say, the technique can also be extended to deal with the tracking problem in a rather straightforward manner. The autonomous dynamics described by (2.15), or equivalently by (2.16), are usually referred to as the ***ideal sliding dynamics.***

Let a be an m x n block diagonal matrix of the form diag (α_i^T), and let α_1 be the m x m diagonal matrix formed by the elements α_{i1} (i=1,2,...,m). In vector notation, one writes the collection of sliding surface coordinate functions σ_i as:

$$
\sigma(x) = \sigma[Z^{-1}(\zeta)] = \alpha\,\zeta - \alpha_1 y_d = \alpha Z(x) - \alpha_1 y_d \tag{2.17}
$$

Let μ and W be diagonal matrices of strictly positive constants μ_i, W_i , respectively. Moreover, let SGN(σ) denote the vector of sign functions of the components of σ. If we impose on the vector σ the following discontinuous (sliding mode) dynamics:

$$
\dot{\sigma} = -\mu[\sigma + W\,\mathrm{SGN}(\sigma)] \tag{2.18}
$$

then, as it can be easily verified, each component σ_i of σ independently achieves the condition : $\sigma_i = 0$, in a finite amount of time, Ti, given explicitly by : $T_i = \mu^{-1} \ln (1+W_i^{-1} |s_i(0)|)$.

Using (2.18), (2.17) and (2.2), one obtains the following variable structure controller which achieves 'collective' sliding mode on the intersection surface, $\sigma(x) = 0$, in finite time:

$$u = -A^{-1}(x)\left\{b(x) + \alpha F Z(x) + \mu\left(\alpha Z(x) - \alpha_1 y_d + W\, SGN(\alpha Z(x) - \alpha_1 y_d)\right)\right\} \tag{2.19}$$

Expression (2.19) is the result of the fact that, according to the definitions in (2.3), (2.4), the following matrix products hold true:

$$\alpha\tilde{b}(x) = \mathrm{diag}\,(\alpha_{in_i})b(x) = b(x) \quad ; \quad \alpha\tilde{A}(x) = \mathrm{diag}\,(\alpha_{in_i})\,A(x) = A(x)$$

with $A(x)$ and $b(x)$ as defined in (2.9) and the diagonal matrix $\mathrm{diag}(\alpha_{ni})$ is just the identity matrix.

For points located on several, or all, of the sliding surfaces, however, the solution must be obtained either in terms of Filippov's geometric averaging method (see Filippov [38]), or by using the Method of the 'Equivalent Control' (see [35]). In this case both methods yield the same answer due to the linearity of the system in the control input variables. A virtual control action may then be defined, known as the equivalent control, which represents ideal smooth control actions yielding sliding manifold invariance, even if in a local sense, when trajectories of the system are precisely started on this manifold (see [29]). It is easy to see that such an equivalent control would be defined, on $\sigma(x) = 0$, as :

$$u^{EQ} = -A^{-1}(x)\,[b(x) + \alpha F Z(x)]$$

The above variable structure feedback control policy yields a state-modulated chattering input vector a which achieves robust asymptotic exponential stabilization of the controlled system. However, for mechanical systems, in general, such high-frequency bang-bang inputs are quite unacceptable as they usually excite unmodelled dynamics and subject the system to excessive vibratory motions resulting in undesirable 'wear and tear', not accounting for some other natural limitations of mechanical actuators and sensing devices which may be unablt: to sense, or react, to such fast switching actions.

2.3 Dynamical Sliding Mode Control of Linearizable Multivariable Nonlinear Systems

In order to avoid chattering of the input variables we propose the following design scheme:

a) Given an exactly linearizable multivariable system (2.1), obtain its ***extended system*** (see Nijmeijer and Van der Schaft [9]) just by placing an integrator in front of each input u_i of the system and set the new set of input variables, say v, as auxiliary input variables v_i ($i=1,2,\ldots,m$). This amounts to letting the original input variables u become new state variables.

b) Obtain the Normal Canonical Form of the extended system.

c) Design a static variable structure controller for the auxiliary input vector v, in the extended system, just in the same manner as it was proposed in Section 2.2 above.

d) Interpret the obtained static sliding mode controller for the input v as a *dynamical* variable structure controller in terms of the original input variables u.

It is easy to show that if the original system is exactly linearizable so is the extended system. The same holds for decouplability. Many other crucial properties of nonlinear systems are still retained in the extended system, as it has been demonstrated in [9].

Consider, then, the n+m dimensional extended system of the exactly linearizable system (2.1):

$$\begin{aligned} x &= f(x) + G(x)u \\ \dot{u} &= v \\ y &= h(x) \end{aligned} \tag{2.20}$$

It is easy to see that the following state coordinate transformation yields the normal canonical form associated to (2.20) :

$$Z^e(x,u) := \begin{bmatrix} \zeta \\ \zeta_{n+1} \end{bmatrix} = \begin{bmatrix} Z(x) \\ \zeta_{n_1+1}(x,u) \\ \zeta_{n_2+1}(x,u) \\ \vdots \\ \zeta_{n_m+1}(x,u) \end{bmatrix} = \begin{bmatrix} Z(x) \\ L_f^{n_1} h_1(x) + \sum_{j=1}^{m} L_{g_j} L_f^{n_1-1} h_1(x)\, u_j \\ L_f^{n_2} h_2(x) + \sum_{j=1}^{m} L_{g_j} L_f^{n_2-1} h_2(x) u_j \\ \vdots \\ L_f^{n_m} h_m(x) + \sum_{j=1}^{m} L_{g_j} L_f^{n_m-1} h_m(x) u_j \end{bmatrix} \tag{2.21}$$

Evidently, the above transformation is locally invertible, by virtue of the decouplability assumption imposed on the original system. Indeed, the inverse transformation is given by:

$$\begin{bmatrix} x \\ u \end{bmatrix} = \begin{bmatrix} Z^{-1}(\zeta) \\ -A^{-1}[Z^{-1}(\zeta)]\left[b[Z^{-1}(\zeta)] - \zeta_{n+1}\right] \end{bmatrix} \tag{2.22}$$

where b(x) and A(x) are given by (2.9).

The subsystems constituting the normal canonical form for the extended system are then seen to be of the form:

$$\zeta_{i1} = \zeta_{i2}$$
$$\dot{\zeta}_{i2} = \zeta_{i3}$$

$$\zeta_{i\,(n_i-1)} = \zeta_{i\,n_i}$$
$$\dot{\zeta}_{i\,n_i} = \zeta_{i\,(n_i+1)} \qquad ;\ i = 1,2,\ldots,m \tag{2.23}$$
$$\dot{\zeta}_{i\,(n_i+1)} = L_f^{n_i+1}\, h_i[Z^{-1}(\zeta)] + \sum_{j=1}^{m} L_f L_{g_j} L_f^{n_i-1}\, h_i[Z^{-1}(\zeta)]\, u_j$$
$$+ \sum_{j=1}^{m} L_{g_j} L_f^{n_i}\, h_i[Z^{-1}(\zeta)] u_j + \sum_{j=1}^{m}\sum_{k=1}^{m} L_{g_k} L_{g_j} L_f^{n_i-1}\, h_i[Z^{-1}(\zeta)] u_j u_k$$
$$+ \sum_{j=1}^{m} L_{g_j} L_f^{n_i-1}\, h_i[Z^{-1}(\zeta)] v_j$$
$$y_i = \zeta_{i1}$$

where we have slightly abused notation, by mixing original and transformed coordinates, in the interest of simplifying, somewhat, the resulting expression. As in the previous section, the transfonned system, constituted by subsystems of the form (2.23), may be written as:

$$\frac{d}{dt}\zeta^e = F^e\zeta^e + \tilde{b}^e(\zeta^e) + \tilde{A}^e(\zeta^e)\, v$$
$$y = C^e\zeta^e \tag{2.24}$$

where the vector ζ^e is defined as :

$$\zeta^e = \begin{bmatrix} \zeta_1^e \\ \vdots \\ \zeta_n^e \end{bmatrix} \quad ; \quad \zeta_1^e = \begin{bmatrix} \zeta_{i1} \\ \zeta_{i2} \\ \vdots \\ \zeta_{in_i} \\ \zeta_{i\,n_i+1} \end{bmatrix} = \begin{bmatrix} \zeta_i \\ \zeta_{i\,n_i+1} \end{bmatrix}$$

The matrix F^e is again in companion form, the column vector $\tilde{b}^e$ in (2.24) comprises all the dirft and nonlinear terms involving the components of u appearing in each subsystem of the form

(2.23). The matrix $\tilde{A}^e$ contains the nonlinear terms that relate the auxiliary input variables v to the transfonned state first order derivatives. The i-th row of C^e, as before, picks up only the first component of the transformed subvector ζ_i.

We now prescribe an auxiliary output function, or ***extended sliding surface coordinate function*** $\sigma_i : R^{n_i+1} \rightarrow R$, for each subsystem (2.23). In terms of the transformed coordinates, such a function takes the form :

$$\sigma_i^e(Z^{-1}(\zeta),\zeta_{n_i+1}) = \alpha_{i1}(\zeta_{i1}-y_{id}) + \sum_{j=1}^{n_i} \alpha_{i(j+1)}\zeta_{i(j+1)} \quad ; \; \alpha_{i(n_i+1)} = 1 \tag{2.25}$$

In original coordinates, the sliding surface coordinate functions exhibit an explicit dependence on the original input variables. Below, we rewrite (2.25) in terms of the original coordinates and also in terms of output derivatives :

$$\sigma_i^e(x,u) = \alpha_{i1}[h_i(x) - y_{id}] + \sum_{j=1}^{n_i-1} \alpha_{i(j+1)} L_f^j h_i(x) + L_f^{n_i} h_i(x) + \sum_{j=1}^{m} L_f L_{g_j} h_i(x) u_j \tag{2.26}$$

$$\sigma_i^e = \alpha_{i1}[y - y_{id}] + \sum_{j=1}^{n_i} \alpha_{i(j+1)} y^{(j)} \quad ; \; \alpha_{i(n_i+1)} = 1 \tag{2.27}$$

The coefficients α_{ij} are chosen in such a way that the following polynomial, in the complex variable s, is Hurwitz for each i :

$$p_i(s) = \alpha_{i1} + \sum_{j=1}^{n_i-1} \alpha_{i(j+1)} s^j \tag{2.28}$$

One now imposes, as before, a discontinuous dynamics on the collection of extended surface coordinate functions which guarantees the local existence of a sliding regime on the intersection of their zero level sets (i.e., on the sliding surface: $\sigma^e(x,u) = 0$):

$$\frac{d}{dt}\sigma^e = -\mu\left[\sigma^e + W\,SGN(\sigma^e)\right] \tag{2.29}$$

The collective sliding motion is thus achieved in finite time. As before, an asymptotically stable dynamics is obtained for the ***extended ideal sliding dynamics.*** This is given now by:

$$
\begin{aligned}
&\dot{\zeta}_{i1} = \zeta_{i2} \\
&\dot{\zeta}_{i2} = \zeta_{i3} \\
&\cdots \\
&\dot{\zeta}_{i(n_i-1)} = \zeta_{in_i} \\
&\dot{\zeta}_{i(n_i)} = \zeta_{in_i+1} = -\alpha_{i1}(\zeta_{i1}-y_{id}) - \alpha_{i2}\zeta_{i2} - \ldots - \alpha_{i\,n_i}\zeta_{i\,n_i} \qquad ;\ i = 1,2,\ldots,m \\
&y_i = \zeta_{i1}
\end{aligned}
\tag{2.30}
$$

In terms of the i-th output variable and its time derivatives (2.30) is rewritten as:

$$
y_i^{(n_i)} = -\alpha_{i1}(y_i-y_{id}) - \sum_{j=1}^{n_i-1} \alpha_{i(j+1)} y_i^{(j)} \tag{2.31}
$$

Let a^e be an m x (n+m) block diagonal matrix of the form: diag ($\alpha^{e_i T}$) and let α_1 be the m x m diagonal matrix formed by the elements α_{i1} (i=1,2,...,m). In vector notation, one writes the collection of extended sliding surface coordinate functions σ^e_i as:

$$
\sigma[Z^{-1}(\zeta^e)] = \alpha^e \zeta^e - \alpha_1 y_d \tag{2.32}
$$

Using (2.32), (2.29) and (2.24), one obtains the following ***static variable structure controller*** which achieves 'collective' sliding mode on the intersection surface, $\sigma^e(x) = 0$, in finite time:

$$
v = -A^{-1}(\zeta^e)\left\{\hat{b}(\zeta^e) + \alpha^e F^e \zeta^e + \mu\left(\alpha^e\zeta^e - \alpha_1 y_d + W\,\mathrm{SGN}(\alpha\zeta^e - \alpha_1 y_d)\right)\right\} \tag{2.33}
$$

Expression (2.33) is obtained in the same manner as (2.19) and as a matter of fact the decouplability matrix A(x) is still the same, i.e., $A(\zeta^e) = A(\zeta)$, as defined in (2.9). The vector $\hat{b}(x,u)$ collects all the linear and nonlinear terms in the components of u, as well as the drift terms that appear in each subsystem of the form (2.23).

The controller expression in (2.33) may be readily interpreted in term:; of the original input coordinates as a ***dynamical variable structure feedback control*** leading to a local sliding regime on an input-dependent sliding surface defined in the extended state space:

$$\dot{u} = -A^{-1}(x)\left\{\hat{b}(x,u) + \alpha^e F^e Z^e(x,u) + \mu\left(\alpha^e Z^e(x,u) - \alpha_1 y_d + W\,SGN\left[\alpha^e Z^e(x,u) - \alpha_1 y_d\right]\right)\right\} \tag{2.34}$$

The solution of the above discontinuous system of differential equations offers no particular difficulty in the vicinity of points located away from the collection of sliding surfaces $\sigma^e(x,u) = 0$, i.e., whenever the components of the vector sign function SGN (σ^e) are fixed. The equivalent control would be now defined, on $\sigma(x,u) = 0$, as the solution of :

$$\frac{d}{dt} u^{EQ} = -A^{-1}(x)\left[\hat{b}(x,u^{EQ}) + a^e F^e Z^e(x,u^{EQ})\right] \tag{2.35}$$

3. DYNAMICAL SLIDING MODE CONTROL OF AN HELICOPTER IN VERTICAL FLIGHT.

3.1 The helicopter model [8]

We consider a miniature helicopter mounted on a stand (see Figure 1) which places it sufficiently high above the ground (over one rotor blade diameter). The stand is equipped with conveniently located pistons which offset the weight of the stand while the helicopter is in motion.The following set of differential equations describes the vertical motions of the X-Cell50 model miniature helicopter:

$$\ddot{z} = K_1(1+G_{eff})C_T\omega^2 - g - K_2\dot{z} - K_3\dot{z}^2 - K_4 \tag{3.1}$$

where:

$$C_T = \left[\ -K_{C1} + \sqrt{K_{C1}^2 + K_{C2}\,\theta_c}\ \right]^2 \tag{3.2}$$

and

$$\dot{\omega} = -K_5\omega - K_6\omega^2 - K_7\omega^2 \sin\theta_c + K_8 u_{th} + K_9 \tag{3.3}$$

$$\ddot{\theta}_c = K_{10}\left(-0.00031746\, u_{\theta_c} + 0.5436 - \theta_c\right) - K_{11}\dot{\theta}_c - K_{12}\omega^2 \sin\theta_c \tag{3.4}$$

The above variables are defined as:

z : height above the ground (m).
ω : rotational speed of the rotor blades (rad/s).
g : gravitational force (m/s^2).

θ_c : collective pitch angle of the rotor blades (rad).
u_{th} : input to the throttle.
$u_{\theta c}$: input to the collective servomechanisms (rad).

The first term in equation (3.1) is the main thrust term, taken to be proportional to the square of the rotational speed of the rotor blades, ω, and dependent also upon the ground effect term, $G_{eff}(z)$, which we will assume to be zero for sufficiently high initial conditions of the altitude variable,.A damping term is present in equation (3.1) just to account for the piston mounted on the stand. Equation (3.1) also includes parasitic and constant drag forces as third and fourth terms respectively. Equation (3.2) is a modification of that found in Johnson [39] and it relates the thrust constant C_T to the collective pitch angle θ_c. The two stroke engine, and its effect on the rotational velocity of the rotor blades, is modelled by equation (3.3). This equation includes a damping term, two air foil drag losses terms and a linear approximation of the combustion engine, as well as the throttle servo input, u_{th}, to the rotational speed, ω. Finally, equation (3.4) represents the collective pitch servo response to the input $u_{\theta c}$. The first terms of (3.4) represent a linear approximation of the relationship between the servo input and the resulting collective pitch in steady state. The last two temns represent the damping of the servo system due to the servo motor and linkages and a torque drag term.

Nominal values of the parameters, taken from Pallet et *al* [8], are given as :

$$K_1 = 0.25\text{m}\ ,\ K_2 = 0.10\text{s}^{-1},\ K_3 = 0.1\ \text{m}^{-1},\ K_4 = 7.86\ \text{m/s}^2,\ K_5 = 0.70\ \text{s}^{-1},\ K_6 = 0.0028,$$
$$K_7 = 0.005,\ K_8 = -\ 0.1088\ \text{s}^{-2},\ K_9 = -13.92\text{s}^{-2},\ K_{10} = 800.00\ \text{s}^{-2},\ K_{11} = 65.00\text{s}^{-1},\ K_{12} = 0.1,$$
$$K_{C1} = 0.03259,\ K_{C2} = 0.061456.$$

Model (3.1)-(3.4) may be written in terms of a state variable representation as follows:

$$\begin{aligned} \dot{x} &= f(x) + g_1(x)u_1 + g_2(x)u_2 \\ y &= Cx \end{aligned} \qquad (3.5)$$

where:

$$x = \begin{bmatrix} z & \dot{z} & \omega & \theta_c & \dot{\theta}_c \end{bmatrix}^T \qquad u = [u_1\ \ u_2]^T = [\,K_8 u_{th}\ \ -0.00031746\,K_{10}u_{\theta c}\,]^T$$

$$f(x) = \begin{bmatrix} x_2 \\ x_3^2(a_1+a_2x_4-\sqrt{a_3+a_4x_4}\,) + a_5x_2 + a_6x_2^2 + a_7 \\ a_8x_3+a_{10}x_3^2\sin x_4+a_9x_3^2+a_{11} \\ x_5 \\ a_{13}x_4+a_{14}x_3^2\sin x_4+a_{15}x_5+a_{12} \end{bmatrix} ; \; g_1(x) = \begin{bmatrix} 0 \\ 0 \\ 1 \\ 0 \\ 0 \end{bmatrix} ; g_2(x) = \begin{bmatrix} 0 \\ 0 \\ 0 \\ 0 \\ 1 \end{bmatrix}$$

$$y = \begin{bmatrix} y_1 \\ y_2 \end{bmatrix} = \begin{bmatrix} x_1 \\ x_4 \end{bmatrix} = \begin{bmatrix} 1 & 0 & 0 & 0 & 0 \\ 0 & 0 & 0 & 1 & 0 \end{bmatrix} x$$

The parameters a_1 through a_{15} are given by:

$$a_1 = 5.31 \times 10^{-4}, \; a_2 = 1.5364 \times 10^{-2}, \; a_3 = 2.82 \times 10^{-7}, \; a_4 = 1.632 \times 10^{-5}$$
$$a_5 = -K_2, \; a_6 = -K_2, \; a_7 = -g-K_4, \; a_8 = -K_5, \; a_9 = -K_6, \; a_{10} = -K_6$$
$$a_{11} = K_9, \; a_{12} = 0.5436K_{10}, \; a_{13} = -K_{10}, \; a_{14} = -K_{12}, \; a_{15} = -K_{11}$$

The extended system equations for the helicopter model (3.5) are of the form:

$$\begin{aligned} \dot{x} &= f(x) + g_1(x)u_1 + g_2(x)u_2 \\ \dot{u}_1 &= v_1 \\ \dot{u}_2 &= v_2 \\ y &= Cx \end{aligned} \tag{3.6}$$

The following (input-dependent) invertible state coordinate transformation:

$$\begin{aligned} \zeta_{11} &= x_1 \\ \zeta_{12} &= x_2 \\ \zeta_{13} &= x_3^2(a_1+a_2x_4-\sqrt{a_3+a_4x_4}\,)+a_5x_2+a_6x_2^2+a_7 \\ \zeta_{14} &= 2x_3(a_1+a_2x_4-\sqrt{a_3+a_4x_4}\,)\,(a_8x_3+a_{10}x_3^2\sin x_4 + a_9x_3^2+a_{11}+u_1) \\ &\quad +(a_5+2a_6x_2)[x_3^2(a_1+a_2x_4-\sqrt{a_3+a_4x_4}\,)+a_5x_2+a_6x_2^2+a_7] \\ &\quad +x_3^2[a_2x_5-\tfrac{1}{2}a_4x_5(a_3+a_4x_4)^{-1/2}] \\ \zeta_{21} &= x_4 \\ \zeta_{22} &= x_5 \\ \zeta_{23} &= a_{13}x_4+a_{14}x_3^2\sin x_4 + a_{15}x_5+a_{12}+u_2 \end{aligned} \tag{3.7}$$

together with its inverse transformation, given by :

$$x_1 = \zeta_{11}$$

$$x_2 = \zeta_{12}$$

$$x_3 = \sqrt{\frac{\zeta_{13}-a_5\zeta_{12}-a_6\zeta_{12}^2-a_7}{(a_1+a_{12}\zeta_{21}-\sqrt{a_3+a_4\zeta_{21}})}} =: \beta_1$$

$$x_4 = \zeta_{21}$$

$$x_5 = \zeta_{22}$$

$$u_1 = \frac{\left[\zeta_{14}-(a_5+2a_6\zeta_{12})[\beta_1^2(a_1+a_{12}\zeta_{21}-\sqrt{a_3+a_4\zeta_{21}})+a_5\zeta_{12}+a_6\zeta_{12}^2+a_7]\right.}{2\beta_1(a_1+a_{12}\zeta_{21}-\sqrt{a_3+a_4\zeta_{21}})}$$

$$-\frac{\left.\beta_1^2[a_2\zeta_{22}+\frac{1}{2}a_4\zeta_{22}(a_3+a_4\sin\zeta_{21})^{-1/2}]\right]}{2\beta_1(a_1+a_{12}\zeta_{21}-\sqrt{a_3+a_4\zeta_{21}})} -a_8\beta_1-a_{10}\beta_1^2\sin\zeta_{21}-a_9\beta_1^2 - a_{11}$$

$$u_2 = \zeta_{23} - a_{13}\zeta_{21}-a_{14}\left[\frac{\zeta_{13}-a_5\zeta_{12}-a_6\zeta_{12}^2-a_7}{(a_1+a_2\zeta_{21}-\sqrt{a_3+a_4\zeta_{21}})}\right]\sin\zeta_{21} - a_{15}\zeta_{22}-a_{12} \tag{3.8}$$

take the extended system (3.6) into Isidori's normal canonical form :

$$\zeta_{11} = \zeta_{12}$$

$$\dot{\zeta}_{12} = \zeta_{13}$$

$$\dot{\zeta}_{13} = \zeta_{14}$$

$$\begin{aligned}\dot{\zeta}_{14} = {} & [2\beta_2^2 + 2\beta_1(a_8\beta_2 + 2a_{10}\beta_1\beta_2 \sin\zeta_{21} + a_{10}\beta_1^2\zeta_{22}\cos\zeta_{21} + 2a_9\beta_1\beta_2)] \\ & (a_1 + a_2\zeta_{21} - \sqrt{a_3 + a_4\zeta_{21}}) + 4\beta_1\beta_2(a_2\zeta_{22} - \tfrac{1}{2}a_4\zeta_{22}(a_3 + a_4\zeta_{21})^{-1/2} \\ & + (a_5 + 2a_6\zeta_{12})\zeta_{14} + 2a_6\zeta_{13}^2 + \beta_1^2[a_2\zeta_{23} - \tfrac{1}{2}a_4\zeta_{23}(a_3 + a_4\zeta_{21})^{-1/2} \\ & + \tfrac{1}{4}a_4^2\zeta_{22}^2(a_3 + a_4\zeta_{21})^{-3/2}] + 2\beta_1(a_1 + a_2\zeta_{21} - \sqrt{a_3 + a_4\zeta_{21}})\, v_1\end{aligned}$$

$$\dot{\zeta}_{21} = \zeta_{22}$$

$$\dot{\zeta}_{22} = \zeta_{23}$$

$$\dot{\zeta}_{23} = a_{13}\zeta_{22} + 2a_{14}\beta_1\beta_2 \sin\zeta_{21} + a_{14}\beta_1^2\zeta_{22}\cos\zeta_{21} + a_{15}\zeta_{23} + v_2$$

$$y_1 = \zeta_{11}$$

$$y_2 = \zeta_{21} \qquad (3.9)$$

with:

$$\beta_2 = \frac{\zeta_{14} - (a_5 + 2a_6\zeta_{12})\zeta_{13} - \beta_1^2[a_2\zeta_{22} - \tfrac{1}{2}a_4\zeta_{23}(a_3 + a_4\zeta_{21})^{-1/2}}{2\beta_1(a_1 + a_2\zeta_{21} - \sqrt{a_3 + a_4\zeta_{21}})} \qquad (3.10)$$

Transformation (3.8),(3.9) is everywhere invertible, except on the: set of state values satisfying the condition : $\beta_1\left(a_1 + a_2\zeta_{21} - \sqrt{a_3 + a_4\zeta_{21}}\right) = 0$. The rotor blade speed $\omega = x_3 = \beta_1$ is never zero while the helicopter is in flight. It is easy to see that since $a3 = a_1^2$ the only physically meaningful solution of this realtion happens when the collective pitch ζ_{21} is zero. From a practical standpoint such a situation seldom happens since the collective pitch takes a nominal nonzero value (typically, 7 to 8 degrees) which is controlled, throughout the maneuver, to the same, or higher, operating point. However, if it is absolutely required to cross the zero collective pitch condition, in a complex altitude maneuver, then the method exposed here fails, and large discontinuities have to be imposed, momentarily, on the control input. This topic is not addressed here in any further detail (see Fliess et *al* [40] for related details).

3.2 A dynamical sliding mode controller design for helicopter altitude stabilization

Giiven the mechanical nature of the helicopter system being controlledl, static sliding mode controller design should be avoided, as its actions result in chattering of the throttle input and chattering collective pitch servomechansm input. The behavior of the system would be sufficiently smooth but the actuators will unnecessarily suffer the effects of excesive vibratory (bang-bang type) commands. Thus, a dynamical variable structure control design procedure, as outlined in section 2.3, will be applied to the helicopter model by designing a static variable structure controller on the extended helicopter model. For this, we define the sliding surface coordinate functions as:

$$\begin{aligned} \sigma_1(\zeta) &= \zeta_{14} + \alpha_{13}\zeta_{13} + \alpha_{12}\zeta_{12} + \alpha_{11}(\zeta_{11} - y_{1d}) \\ \sigma_2(\zeta) &= \zeta_{23} + \alpha_{22}\zeta_{22} + \alpha_{21}(\zeta_{21} - y_{2d}) \end{aligned} \qquad (3.11)$$

where y_{1d} is the desired constant height to which the helicopter is to be driven while achieving a stable hovering. The desired value y_{2d} of the collective pitch angle is usually chosen as a nominal value at which liftoff and hovering is obtained.

If a sliding regime exists on the zero level sets of the sliding surface coordinate functions, σ_1 and σ_2 , then the ideal sliding dynamics for each input-output decoupled subsystem is asymptotically stable toward the desired equilibrium condition. The output signals y_1, y_2 are then governed by the following asymptotically stable, decoupled, autonomous, time-invariant linear differential equations :

$$\begin{aligned} \dddot{y}_1 + \alpha_{13}\ddot{y}_1 + \alpha_{12}\dot{y}_1 + \alpha_{11}(y_1 - y_{1d}) &= 0 \\ \ddot{y}_2 + a_{22}\dot{y}_2 + a_{21}(y_2 - y_{2d}) &= 0 \end{aligned} \qquad (3.12)$$

The expressions for the dynamical controllers are obtained by forcing the surface coordinate functions σ_1 and σ_2 to satisfy the following autonomous sliding mode dynamics :

$$\dot{\sigma}_1 = -\mu_1[\sigma_1 + W_1 \operatorname{sgn} \sigma_1] \quad ; \quad \dot{\sigma}_2 = -\mu_2[\sigma_2 + W_2 \operatorname{sgn} \sigma_2] \qquad (3.13)$$

Using (3.11) and (3.13), and solving for the first order derivatives of the original control vector components, one obains the following set of time-varying, first order, nonlinear discontinuous differential equations for the multivariable controller accomplishing output stabilization around the desired equilibrium condition :

$$
\begin{aligned}
\dot{u}_1 = -\frac{1}{2x_3(a_1+a_2x_4-\sqrt{a_3+a_4x_4})}\Bigg\{\Big[&2(a_8x_3+a_{10}x_3^2\sin x_4 + a_9x_3^2+a_{11}+u_1)^2 + 2a_{10}x_3^3x_5\cos x_4\Big] \\
&+2(a_8x_3+a_{10}x_3^2\sin x_4 + a_9x_3^2+a_{11}+u_1)(a_8x_3+2a_{10}x_3^2\sin x_4 + 2a_9x_3^2)\Big](a_1+a_2x_4-\sqrt{a_3+a_4x_4}) \\
&-4x_3(a_8x_3+a_{10}x_3^2\sin x_4 + a_9x_3^2+a_{11}+u_1)\Big[a_2x_5 - \tfrac{1}{2}a_4x_5(a_3+a_4x_4)^{-1/2}\Big] + (a_5+2a_6x_2)\zeta_{14}+2a_6\zeta_{13}^2 \\
&+x_3^2\Big[a_2\zeta_{23} - \tfrac{1}{2}a_4\zeta_7(a_3+a_4x_4)^{-1/2} + \tfrac{1}{4}a_4^2x_5^2(a_3+a_4x_4)^{-3/2}\Big] + \alpha_{11}x_2 + \alpha_{12}\zeta_{13} + \alpha_{14}\zeta_{14} \\
&+\mu_1\Big[\zeta_{14} + \alpha_1(x_1 - y_{1d}) + \alpha_2x_2 + \alpha_3\zeta_{13} + W_1\,\mathrm{sgn}\Big(\zeta_{14} + \alpha_1(x_1 - y_{1d}) + \alpha_2x_2 + \alpha_3\zeta_{13}\Big)\Big]\Bigg\}
\end{aligned}
\tag{3.14}
$$

$$
\begin{aligned}
\dot{u}_2 = &-a_{13}x_5 - 2a_{14}x_3(a_8x_3+a_{10}x_3^2\sin x_4 + a_9x_3^2+a_{11}+u_1)\sin x_4 - a_{14}x_3^3x_5\cos x_4 \\
&-(a_{15}+\alpha_6)(a_{13}x_4+a_{14}x_3^2\sin x_4 + a_{15}x_5+a_{12}+u_2) - \alpha_5x_5 \\
&-\mu_2\Big\{(a_{13}x_4 + a_{14}x_3^2\sin x_4 + a_{15}x_5+a_{12}+u_1) + \alpha_5(x_4 - y_{2d}) + \alpha_6x_5 \\
&+W_2\,\mathrm{sgn}\Big[(a_{13}x_4+a_{14}x_3^2\sin x_4 + a_{15}x_5+a_{12}+u_1) + \alpha_5(x_4 - y_{2d}) + \alpha_6x_5\Big]\Big\}
\end{aligned}
\tag{3.15}
$$

where ζ_{13}, ζ_{14} and ζ_{23} are defined as in (3.7) .

3.3 Simulation Results

Simulations were performed for, both, the static and the dynamical variable structure feedback controllers proposed in section 2. From a hovering equilibrium contlition, located at $y_1 =$ 0.75 m, with a nominal collective pitch of $y_2 = 0.125$ rad, the helicopter was required to rise to a hight of 1.25m while simultaneously rising the collective pitch from 0.125 to a new nominal value of 0.20 to ease the trhrottle magnitude and at the same time obtain adequate. lift force. The static variable structure controller exhibits sufficiently smoothed outputs asymptotically converging, respectively, toward the desired (reference) altitude and nominal collective pitch angle, as it can be seen from figure 2. However, the input variables u_1 and u_2, shown in figure 3, exhibit unacceptable chattering behavior. In contrast, the generated input trajectories for the dynamical variable structure controller are quite smooth with unnoticeable chattering while exhibiting the same qualitative response for the output vector trajectories. The dynarnical sliding mode controlled responses for the output variables are shown in figure 4. Figure 5 shows the dynamically

generated control input trajectories for u_1 and u_2. The values of μ, W and a's for the static variable structure controller case were chosen as :

$$\mu_1 = 10,\ W_1 = 2,\ a_{,,} = 10,\ a_{,,} = 5,$$
$$\mu_2 = 10,\ W_2 = 2,\ \alpha_{21} = 3$$

while those corresponding to the dynamical case were set to be :

$$\mu_1 = 10,\ W_1 = 2,\ a_{,,} = 30,\ a_{,,} = 25,\ \alpha_{13} = 8,$$
$$\mu_2 = 10,\ W_2 = 2,\ \alpha_{21} = 20,\ a_{,,} = 9$$

4. CONCLUSIONS AND SUGGESTIONS FOR FURTHER RESEARCH

A dynamical variable structure controller scheme has been presented which achieves robust asymptotic output stabilization for nonlinear multivariable systems which are exactly linearizable. The dynamical feedback controller generates smoothed control inputs to the given system and constrains all undesirable chattering effects to the state space of the controller, thus effectively eliminating the undesirable effects of high frequency bang-bang signals on the system variables and inputs. The proposed controller requires the on-line integration of a nonlinear discontinuous system of differential equations. Such integration offers no particular difficulty for the implementation over those commonly encountered in, say, state observers. Dynamical sliding mode control opens up the possibilities of having chattering-free controlled responses in a variety of dynamical controlled systems where, traditionally, the variable structure control approach encountered natural limitations for its implementation due unmodelled dynamics excitation. Thus, through system extension, one may directly apply this robust control technique to mechanical systems in general.

Applications of the proposed dynamical feedback variable structure regulator were carried out in this article for a non-trivial helicopter example comprising 5 states and 2 inputs. The simulation results are quite encouraging and work is presently under way leading to actual implementation in the laboratory facility of the Real Time Robot Control Systems Laboratory at Purdue University.

As topics for further research, dynamical sliding mode control strategies can be extended to nonlinear multivariable systems of the non-decouplable class. Adaptive regulation techniques for cases in which parameter uncertainty is present both at the plant, and at the sliding surface, is being presently pursued.

Acknowledgments The authors gratefully acknowledge useful discussions with Mr. Tobias Pallett of the Advanced Control Systems Engineering Department of Ford Motor Co.

REFERENCES

[1] Put. Fliess, "Generalized Controller Canonical Form for Linear and Nonlinear Dynamics," IEEE Transactions on Automatic Control Vol. AC-35, No.9, September 1990.

[2] Put. Fliess, "Nonlinear Control Theory and Differential Algebra," in Modeling and Adaptive Control Ch. I. Byrnes and A. Khurzhansky (Eds.) Lecture Notes in Control and Information Sciences, Vol. 105, Springer-Verlag, 1989.

[3] H. Sira-Ramirez ," Asymptotic Output Stabilization for Nonlinear Systems via Dynamical Variable Structure Control," Dynamics and Control, Vol. 1, No. 3, September 1991. (to appear).

[4] H. Sira-Ramirez , "Dynamical Sliding Mode Control Strategies in the Regulation of Nonlinear Chemical Processess," International J. of Control (to appear).

[5] H. Sira-Ramirez , " Dynamical Variable Structure Control Strategies in Asymptotic Output Tracking Problems," IEEE Transactions on Automatic Control, Vol. AC-37. (to appear).

[6] M. Fliess and F. Messager , "Vers une Stabilisation non linéaire discontinue," in Analysis and Optimization of Systems A. Bensoussan and J.L. Lions, (Eds.), Lecture Notes in Control and Information Sciences, Vol. 144. New York: Springer-Verlag 1990.

[7] H. Sira-Ramirez, M. Zribi and S. Ahmad, "Dynamical Discontinuous Control of Robotic Manipulators with Joint Flexibility," Technical Report, TR-EE-90. School of Electrical Engineering, Purdue University, West Lafayette, Indiana. USA, January 1990.

[8] T. Pallet, B. Wolfert and S. Ahmad, "Real Time Helicopter Flight Control Test Bed," Technical Report TR-EE-91-28, School of Electrical Engineering, Purdue University, West Lafayette, IN 47907, July 1991.

[9] H. Nijmeijer and A.J. Van der Schaft Nonlinear Dynamical Control Systems, Springer-Verlag, Berlin 1990.

[10] H. Sira-Ramirez, "Structure at Infinity, Zero Dynamics and Normal Forms of Systems Undergoing Sliding Motions," International J. of Systems Science Vol. 21, No. 4, pp. 665-674, April 1990.

[11] H. Sira-Ramirez, "The Differential Algebraic Approach in Nonlinear Dynamical Feedback Controlled Landing Maneuvers," IEEE Transactions on Automatic Control Vol. AC-36, No. 9, September 1991 (to appear).

[12] H. Sira-Ramirez, "Dynamical Feedback Strategies in Aerospace Systems Control: A Differential Algebraic Approach," Proceedings of the European Control Conference (ECC-91), Vol. 3, Grenoble, France, July 1991.

[13] H. Sira-Ramirez , "Nonlinear Dynamically Feedback Controlled Descent on a Non Atmosphere-Free Planet : A Differential Algebraic Approach," Control Theory and Advanced Technology Vol. 7, No. 2, July 1991.

[14] W.L. Garrad and E. Low, "Eigenspace Design of Helicopter Flight Control Systems," Technical Report of the Department of Aerospace Engineering and Mechanics at the University of Minesota, November 1990.

[15] M. A. Mannes, J.J. Gribble and D.J. Murray-Smith, "Multivariable Methods for Helicopter Flight Control Law Design: A Review," Proceedings of the 16th Annual Society European Rotorcraft Forum, Paper No. III.5.2, Glasgow, Scotland, September 1990.

[16] G. Meyer, R.L. Hunt, and R. Su, "Design of a Helicopter Autopilot by Means of Linearizing Transformations," Guidance and Control Panel, 35th Symposium, AGARD CP 321, Paper No. 4, 1983.

[17] J.V.R. Prasad, D.P. Schrage and M. Mittal, "Comparison of Nonlinear Controllers for Twin-Lift Configurations," Proceedings of the AIAA Guidance. Navigation. and Control Conference, pp. 1350-1357, Boston, Mass. August 1989.

[18] M. Mittal, J.V.R. Prasad and D.P. Schrage," Nonlinear Adaptive Control of a Twin Lift Helicopter System," Proceedings of the 1990 American Control Conference, San Diego, California, June 1990.

[19] K. Furuta, Y. Ohyama and O. Yamanao, " Dynamics of RC Helicopter and Control," Mathematics and Computers in Simulation XXVI, North Holland, pp. 148-159, 1984.

[20] K. Kienitz, Q. Wu and M. Mansour, "Robust Stabilization of a Helicopter Model," Proceedings of the 29th IEEE Conference on Decision and Control, pp. 2607-2612, Honolulu, Hawaii, December 1990.

[21] T. J. Pallet, B.J. Wolfert and S. Ahmad, "Real-Time Helicopter Flight Control Test Bed" Technical Report TR-EE 91-28, School of Electrical Engineering. Purdue University, July 1991.

[22] R. DeCarlo, G. Matthews and S. H. Zak , "Variable Structure Control of Nonlinear Multivariable Systems : A Tutorial ," Proceedings of the IEEE Vol. 76, No.3, March 1988.

[23] H. Kwatny and H. Kim, "Variable Structure Regulation of Partially Linearizable Dynamics," Systems and Control Letters Vol. 15, pp. 67-80, 1990.

[24] J.S. Liu and K.Yuan," On Tracking Control for Affine Nonlinear Systems by Sliding Mode," Systems and Control Letters Vol. 13, pp. 439-443, 1989.

[25] V. Utkin, Sliding Modes in Control Optimization, Springer-Verlag : Berlin, 1991.

[26] J.J. Slotine and S. Sastry, "Tracking Control of Nonlinear Systems Using Sliding Surfaces With Applications to Robot Manipulators," International Journal of Control, Vol. 39, No. 2, 1983.

[27] J.J. Slotine and W. Li, Applied Nonlinear Control, Prentice-Hall, Englewood Cliffs, New Jersey, 1991.

[28] B. Fernandez, J.K. Hedrick," Control of Multivariable Nonlinear Systems by the Sliding Mode Method," International Journal of Control, Vol. 46, pp. 1019-1040, 1987.

[29] H. Sira-Ramirez "Differential Geometric Methods in Variable Structure Control," International Journal of Control Vol. 48, pp. 1359-1390. 1988.

[30] S. Sastry and A. Isidori, "Adaptive Control of Linearizable Systems," IEEE Transactions on Automatic Control Vol. 34, No. 11, November 1989.

[31] A. Isidori, Nonlinear Control Systems, Springer-Verlag, New York 1989.

[32] H. Sira-Ramirez and M.W. Spong, "Variable Structure Control of Flexilble Joint Manipulators," IASTED International Journal of Robotics and Automation, Vol. 3, No. 2, pp. 57-64. 1988.

[33] T.A.W. Dwyer and H. Sira-Ramirez , "Variable Structrue Control of Spacecraft Attitude Maneuvers," Journal of Guidance, Dynamics and Control , Vol. 11, No. 3, pp. 262-270. May-June 1988.

[34] H. Sira-Ramirez and T.A.W. Dwyer, "Variable Structure Controller Design for Spacecraft Nutation Damping," IEEE Transactions on Automatic Control Vol. AC-32, No. 5, pp. 435-438, May 1987.

[35] V. Utkin, Sliding Modes and Their Applications in Variable Structure Systems, MIR : Moscow 1978.

[36] R. Marino, "High-Gain Feedback in Non-linear Control Systems," International Journal of Control Vol. 42, No. 6, pp. 1368-1385., December 1985.

[37] A. Isidori and C. Moog ," On the Equivalence of the Notion of Transmission Zeros" in Modelling and Adaptive Control C.I. Byrnes and A. Kurzanski (Eds.) Lecture Notes in Control and Information Science, Vol. 105, Springer-Verlag, Berlin 1988.

[38] A.F. Filippov , Differential Equations with Discontinuous Right-Hand Sides, Kluwer Academic Publishers. The Netherlands, 1988.

[39] W. Johnson, Heliconter Theory, Princeton University Press, Princeton, New Jersey 1980.

[40] M. Fliess, P. Chantre, S. Abu el Ata and S. Coic, "Discontinuous Predictive Control, Inversion and Singularities. Application to a Heat Exchanger," in Analysis andOptimization of Systems A. Bensoussan and J.L. Lions, (Eds.), Lecture Notes in Control and Information Sciences, Vol. 144. New York: Springer-Verlag 1990.

FIGURE CAPTIONS

Figure 1.. Miniature Helicopter and Flight Stand.

Figure 2.. Static Multivariable Sliding Mode Controlled Output Responses for Helicopter Altitude Stabilization Problem.

Figure 3.. Control Input Trajectories of Static Multivariable Sliding Mode Controlled Helicopter.

Figure 4.. Dynamical Multivariable Sliding Mode Controlled Output Responses for Helicopter Altitude Stabilization Problem.

Figure 5. Control Input Trajectories of Dynamic Multivariable Sliding Mode Controlled Helicopter.

FIGURES

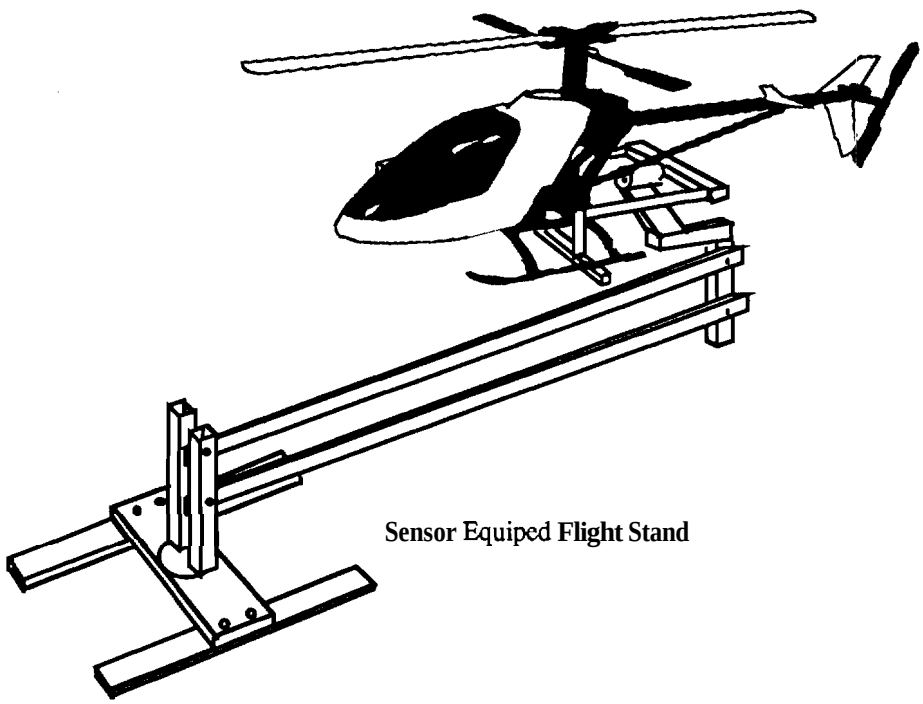

Figure 1. Miniature Helicopter and Flight Stand.

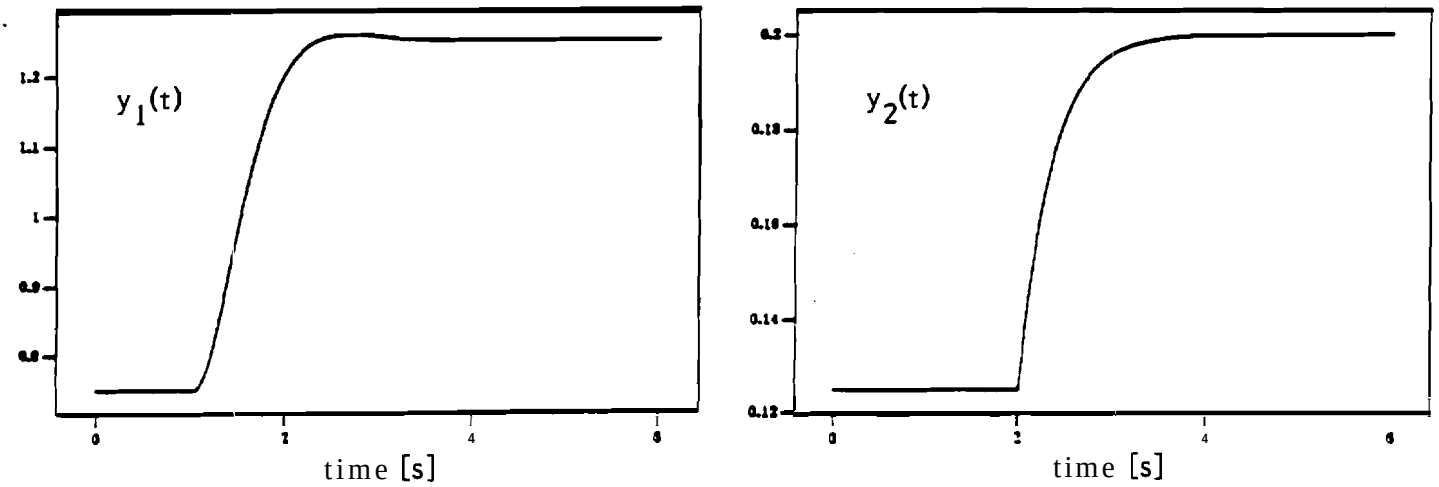

Figure 2. Static Multivariable Sliding Mode Controlled Output Responses for Helicopter Altitude Stabilization Problem.

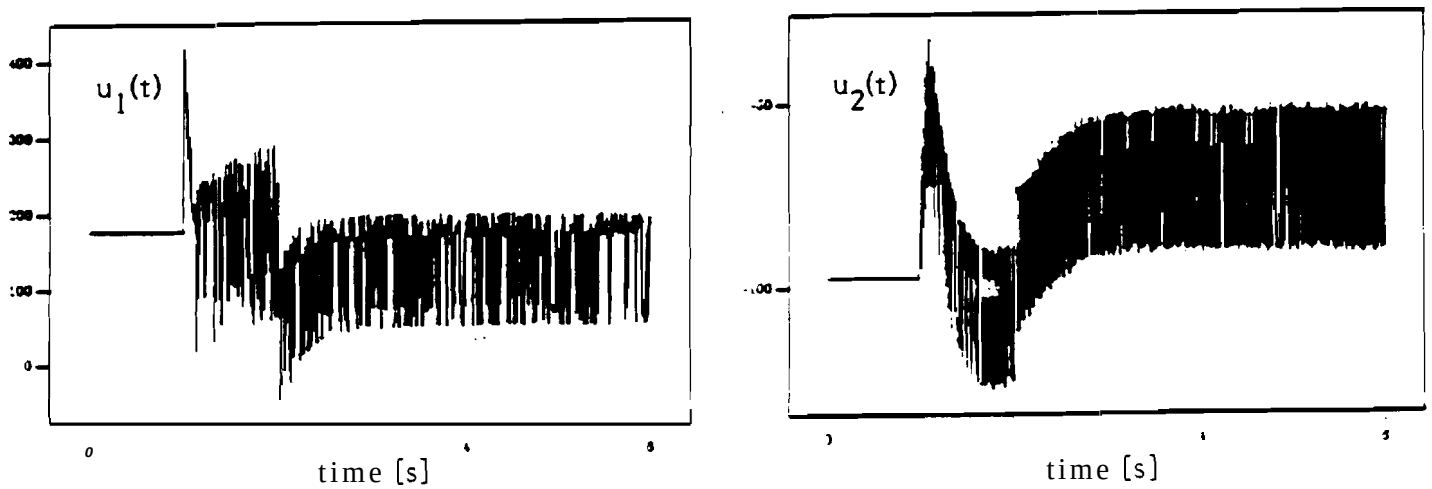

Figure 3. Control Input Trajectories of Static Multivariable Sliding Mode Controlled Helicopter.

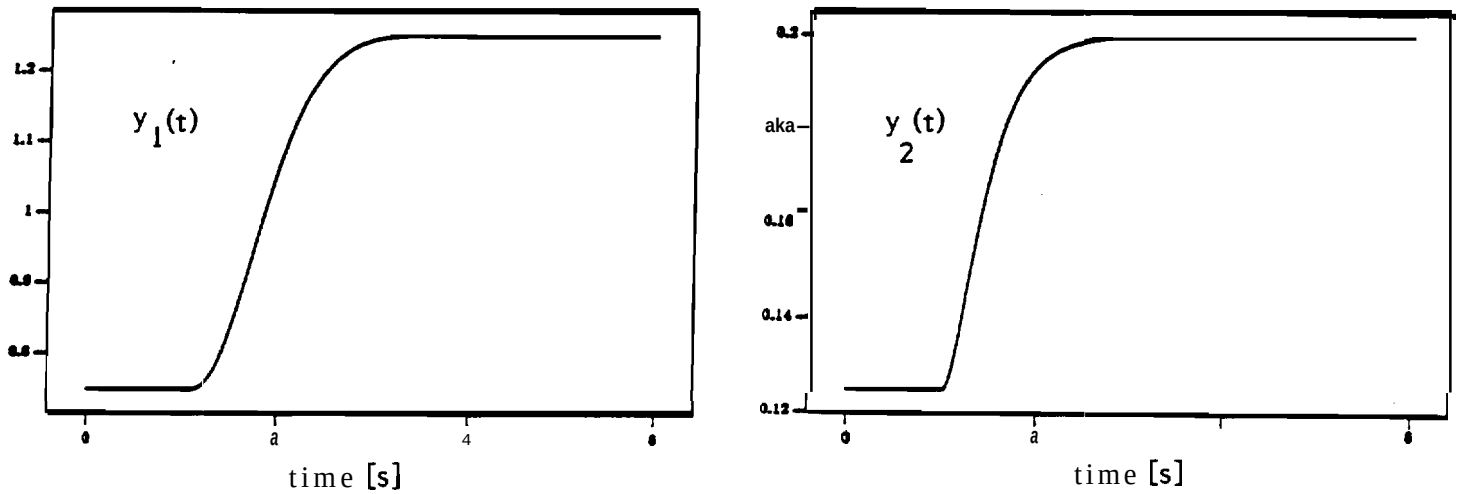

Figure 4. Dynamical Multivariable Sliding Mode Controlled Output Responses for Helicopter Altitude Stabilization Problem.

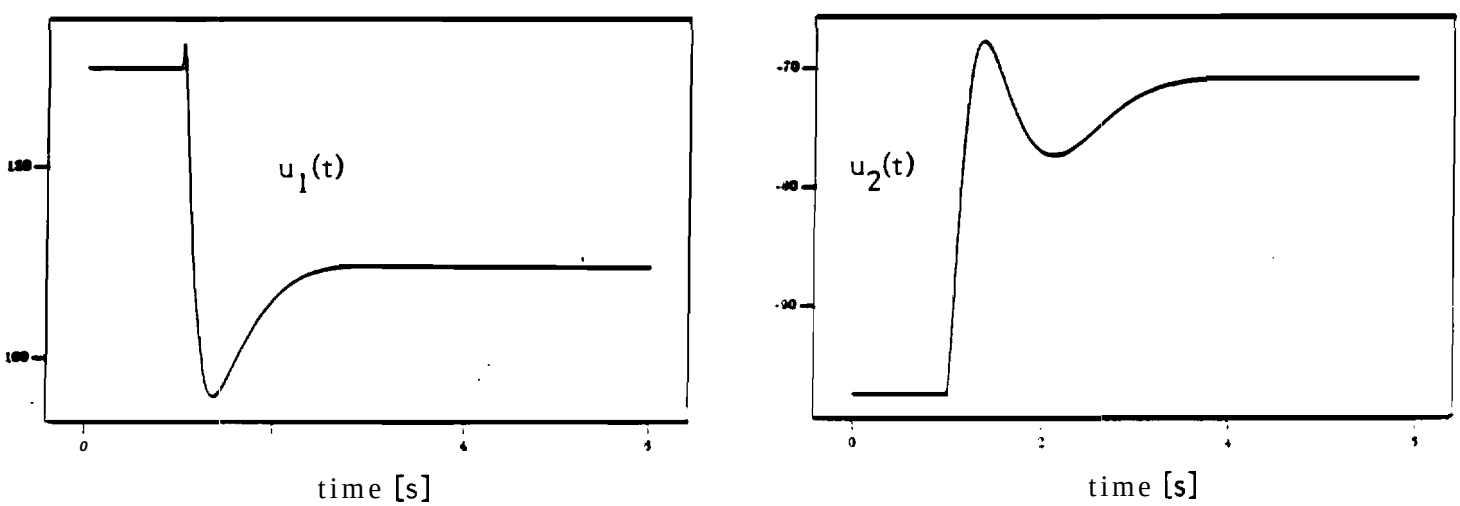

Figure 5. Control Input Trajectories of Dynamic Multivariable Sliding Mode Controlled Helicopter.