7-25-2008

# Color Characterization and Modeling of a Scanner

Sanjyot A. Gindi
*Purdue University*, sgindi@purdue.edu

Graduate School ETD Form 9
(Revised 12/07)

# PURDUE UNIVERSITY
## GRADUATE SCHOOL
## Thesis/Dissertation Acceptance

This is to certify that the thesis/dissertation prepared

By Sanjyot Gindi

Entitled Color Characterization and Modeling of a Scanner

For the degree of Master of Science in Electrical and Computer Engineering

Is approved by the final examining committee:

J. P. Allebach
Chair

C. A. Bouman

G. T. Chiu

To the best of my knowledge and as understood by the student in the *Research Integrity and Copyright Disclaimer (Graduate School Form 20)*, this thesis/dissertation adheres to the provisions of Purdue University's "Policy on Integrity in Research" and the use of copyrighted material.

Approved by Major Professor(s): J. P. Allebach

Approved by: M. J. T. Smith July 24, 2008
Head of the Graduate Program Date

Graduate School Form 20
(Revised 10/07)

# PURDUE UNIVERSITY
## GRADUATE SCHOOL

## Research Integrity and Copyright Disclaimer

Title of Thesis/Dissertation: Color Characterization and Modeling of a Scanner

For the degree of Master of Science in Electrical and Computer Engineering

I certify that in the preparation of this thesis, I have observed the provisions of *Purdue University Executive Memorandum No. C-22,* September 6, 1991, *Policy on Integrity in Research.**

Further, I certify that this work is free of plagiarism and all materials appearing in this thesis/dissertation have been properly quoted and attributed.

I certify that all copyrighted material incorporated into this thesis/dissertation is in compliance with the United States' copyright law and that I have received written permission from the copyright owners for my use of their work, which is beyond the scope of the law. I agree to indemnify and save harmless Purdue University from any and all claims that may be asserted or that may arise from any copyright violation.

Sanjyot Gindi
Signature of Candidate

7/24/2008
Date

*Located at http://www.purdue.edu/policies/pages/teach_res_outreach/c_22.html

# COLOR CHARACTERIZATION AND MODELING OF A SCANNER

A Thesis

Submitted to the Faculty

of

Purdue University

by

Sanjyot A.Gindi

In Partial Fulfillment of the

Requirements for the Degree

of

Master of Science in Electrical and Computer Engineering

August 2008

Purdue University

West Lafayette, Indiana

## ACKNOWLEDGMENTS

I would like to express my sincere gratitude to my advisor Prof.Jan Allebach and my committee members Prof. George Chiu and Prof.Charles Bouman for their guidance and help during the course of the project. It is a matter of great honor for me to have got an opportunity to work with them and be a part of this intellectually enriching experience.

TABLE OF CONTENTS

Page

# LIST OF TABLES

# LIST OF FIGURES

# ABBREVIATIONS

| | |
|---|---|
| dpi | dots per inch |
| CIE | Commission internationale de l'clairage |
| CCD | charge coupled device |
| HVS | Human Visual System |

# ABSTRACT

Gindi, Sanjyot A. M.S.E.C.E., Purdue University, August 2008. Color Characterization and Modeling of a Scanner. Major Professor: Jan P.Allebach.

The quality of digital color image capture systems like scanners and digital cameras is determined by the range of colors they can accurately sense and record. This range of colors is known as the color gamut of the system. Each image capture system has its own color space defined by its set of illuminants and color sensors. Such a *device − dependent* color space is specific and unique to the system. In order that these capture systems be evaluated and compared, the colors sensed by them need to be plotted in a common color space which is independent of any particular system. Such color spaces, called device-independent color spaces, have been defined by Commission internationale de l'clairage(CIE).

The goal of this research is to characterize and model a color scanner and determine its color gamut. Such a color gamut is defined by a transformation matrix that converts the colors in the device dependent color space to those in a standard device-independent color space like CIE XYZ, L*a*b*. In this work, two methods have been used to determine the transformation matrix, namely, a model-based method and a regression based method. The model based method describes the scanner system in terms of its lamp spectrum and the spectral responses of its sensors to the reflectance of the target to be scanned. The regression-based method finds a transformation matrix by mapping the color values of a particular target as recorded by the scanner to its actual values in XYZ space, by regression.

The accuracy with which each method describes the system has been determined and compared. In addition, the system under test is compared with other scanner systems by plotting the color gamuts of each.

# 1. INTRODUCTION

Color imaging systems have undergone tremendous development in recent times. Amongst the commonly used imaging systems in day to day life, printers, monitors and CRTs come under the category of display systems while digital cameras and desktop scanners fall in the category of image capture systems. For both these types, the performance challenge lies in understanding and developing a system with color characteristics as close to the (HVS) human visual system as can be possible. The perception of color by the human eye is an interesting phenomenon related to the spectral responses of the cone cells in the retina. Thus, to achieve a good quality of color in the imaging systems it becomes necessary to model and characterize them in terms of the spectral responses of their components.

Before we can model a color imaging system let us look at some key concepts in color science with respect to the human visual system.

## 1.1 Color Theory Fundamentals

The human eye responds to light with wavelengths roughly within 400-700nm. A color stimulus for the human visual system can be defined as an object which when illuminated by a source of light, reflects light according to its reflectance spectrum, within this spectral bandwidth. The reflectance spectrum is a property characteristic to the target or object under view. The response of the eye is primarily related to this reflectance, the spectrum of the illuminant and the spectral characteristics of its sensors. As it is known, the cone cells which are responsible for color perception are situated in the retina and are of three types. Thus the spectral sensitivities of the sensors of the eye are the spectral responses of three channels corresponding to the long, medium and short wavelengths of the visual spectrm.

### 1.1.1 Multiplicative Model

HVS can be assumed to follow a multiplicative model for the perception of color of any object it sees. This means that if the light falling on the cone cells in the retina of the human eye has a spectral distribution given by $L(\lambda)$ and the spectral sensitivities of the cones are represented by $s_1(\lambda), s_2(\lambda) and\ s_3(\lambda)$, then the response of the cones to the color stimulus is modelled as follows [1]:

$$c_i = \int s_i(\lambda)L(\lambda)d\lambda \tag{1.1}$$

Given similar adaptation conditions, the response of the cone cells as described above, can be directly related to the color of the object as perceived by the eye. The three values corresponding to the responses from the three types of cones define the color of the object. These three values are called the tristimulus values

### 1.1.2 Tristimulus values and color matching functions

Trichromacy is an important property of HVS which says that any color stimulus can be matched using a combination of three light sources [1]. This property is demonstrated using the color matching experiments which uses three colorimetrically independent sources of light in order to match a given color stimulus. In case of any color imaging system, these three sources of light spectra, subject to certain characteristics, are called as the primaries. The tristimulus values now represent the amounts of these primaries needed to match a certain color stimulus spectrum in the color matching experiment. This concept is more intuitive in case of display imaging systems like the CRT or the printers, although it should be remembered that they obey a subtractive color model. In case of the printers the primaries correspond to the color of the (generally) 3 dyes used. With different combinations of the 3 dyes, we can generate a large variety of colors.

A reflectance spectrum of an object can be assumed to be consisting of a combination of monochromatic beams. In order to find the amount of primaries needed to match the color of that object, we define the 'color matching functions' of the primaries. The color matching functions are determined by the amounts of each of the 3 primaries needed to match an individual beam of light at each wavelength within the visual spectrum of 400-700nm. For image capture systems like the digital camera and scanner, the concept of primaries is not defined and the color matching functions correspond to the spectral sensitivities of its color sensors.

### 1.1.3 Standard color spaces

The Commission Internationale de l'clairage(CIE) has defined colorimetry standards known as he CIE RGB and the CIE XYZ. Out of the two, the 1931 CIE XYZ is generally preferred and is determined by a linear transformation from the CIE RGB. The CIE XYZ color matching functions $(x(\lambda), y(\lambda), z(\lambda))$ are positive for all values of wavelengths between 400-700nm. The peculiarity of this choice of CMFs is that, the $y(\lambda)$ spectrum corresponds to the luminous efficiency curve of the HVS. Also, the CMFs are normalized in such a way that an equal energy spectrum gives equal tristimulus values. The chromaticity co-ordinates calculated from the XYZ tristimulus values are used to plot what is known as a chromaticity diagram.

However, the chromaticity diagram is not perceptually uniform. This means that, the distance between 2 colors on the chromaticity diagram is not proportional to the difference in colors as observed by a human observer. Two sets of colors which are separated by same distace on the chromaticity diagram may not appear equally different to the human eye. This perceptual non-uniformity led to the development of another colorimetry standard known as the CIE L*a*b* color space, in 1976. This is a perceptually uniform color space and the L*a*b* values are defined by standard transformations from the CIE XYZ values. The CIE L*a*b* color space is used commonly as an industrial standard for representing colors. The Euclidean distance

between two colors on the CIE L*a*b* space known as $\Delta E_{ab}*$ is a very useful measure for comparison of two colors. The $\Delta E_{ab}*$ is calculated as follows:

$$\Delta E^*_{ab} = \sqrt{(\Delta L^*)^2 + (\Delta a^*)^2 + (\Delta b^*)^2} \tag{1.2}$$

### 1.1.4 Vector space representation

The visual spectrum lies between the wavelengths from 400-700nm. It has been found that any power spectrum within this range can be described by a 31 dimensional vector with a reasonable accuracy. Each value of this vector corresponds to the intensity at every 10nm from 400-700nm. Thus, an illuminant spectrum can be represented as a 31x1 vector and the color matching functions can be described by a 31x3 matrix, each column representing each channel. The 3 columns of this matrix are linearly independent for the HVS. With this hilbert space representation, the response of the eye to a color stimulus can be thought of as a product of the reflectance vector and the color matching functions' matrix. The matrix product results in a 3x1 vector which represents the tristimulus values. Also it can be inferred that, since the color matching functions matrix makes it an underconstrained system of equations which calculate the tristimulus values, there maybe more than one spectra that give the same tristimulus values. This reconfirms 'metamerism', or the fact than different spectra may appear to be of the same color to the eye. In continuation with this same notation, the primaries are represented by 31x1 vectors each. While characterizing a particular imaging system, it is often necessary to transform back and forth between different color spaces. For example, transformation from the scanner-dependent RGB space trisimulus values to the CIEXYZ tristimulus values. This transformation is a 3x3 matrix which projects any vector in the RGB space onto the XYZ space.

### 1.1.5 Color Gamut

Given the set of primaries or color matching functions for a system, we can find a transformation matrix that defines the colors in the CIE XYZ space. As a result, the range of colors that a scanner system can sense or a display system can reproduce can be determined in a device-independent color space. This range of colors is known as the color gamut of the system. For a comparative study of different imaging systems based on the range of colors they can reproduce or sense, it is necessary to plot the color gamuts of these systems in a perceptually uniform space like the CIE $L^*a^*b^*$. It is sometimes convenient to take slices of this 3D gamut in the $L^*$ axis. It is also common to plot the gamut using the chromaticity co-ordinates on the chromaticity diagram.

With this background of fundamentals of color science and perception of the HVS, we will be describing the characterization and calibration of color scanners in this work. Some concepts will be described more elaborately as needed. Chapter 2 gives an overview of the research work in the field of digital color image capture systems, particularly the modeling and performance of color scanners. Chapter 3 describes in detail the experiments undertaken and the setup needed for the purpose of this work. Chapter 4 explains the models used in characterization and calibration of the scanner systems under test. Finally, chapter 5 presents the results of the models and a comparative analysis of different systems and chapter 6 summarizes the conclusions.

# 2. OVERVIEW OF PREVIOUS WORK

A lot of work has been done in the field of characterization and calibration of digital image capture systems. 'The Digital Color Imaging Handbook' [1] gives a comprehensive study of all imaging systems and elaborately explains the models used to represent them. As has been described in the following chapters, a transformation matrix converts the RGB scanner values to a device independent space which is known commonly as the profile connection space(PCS). The choice of the PCS is different for different applications.

[2]uses the CIE $L^*a^*b^*$ space as the PCS to convert the scanner RGB values. The gray balancing is done using the L* values and 3x1 dimensional LUTs are determined using regression. The transformation from scanner RGB to L*a*b* space is done using a 9-term polynomial function and 3-D LUTs are defined. This paper investigates the dependence of scanner characterization on different media types like, plain, coated and glossy paper; as well as for different printing mechanisms i.e. inkjet and laser. While having a different color profile for each media and printing mechanism is the best solution, it consumes a lot of memory. One way to overcome this drawback is to have unified color profiles for halftoning printing processes and another for all types of media. However this results in a tradeoff in the accuracy of characterization which is reflected in the $\Delta E$ values.

In the paper by Wu et.al [3] two methods for use of a digital camera for colorimetry have been described. Our work is based pre-dominiantly on the methods described in this paper. These methods are the regression based method and the model based method. The regression based method describes the procedure for gray balancing of the raw RGB, which are then mapped to CIE XYZ values using a transformation matrix determined by regression. The model method uses a monochromator and spectroradiometer to measure the spectral responses and the reflectance of the targets.

The difference in the model employed by us and the one in this paper is that the paper describes the use of number of sets of 3-channel filters and the R,G,B values is found in each case for the various color patches. Our work for the scanner is based on the spectral sensitivity curves of a single 3-channel filter system. This paper also explains a multi-illuminant based system in which the transformation matrices are determined for 5 different illuminants used. The evaluation of the model is based on the caluculation of the $\Delta E$ values.

In continuation with [3] a camera and 2 filters are used for the imaging colorimeter to measure tooth color in [4]. It introduces some change in the setup and the model to improve accuracy. A system to estimate the color of the tooth in clinical environment is designed and a regression based model that can estimate spectral reflectance of the target from the RGB values of the camera is proposed.

Linearity and colorimetric nature of a scanner are two important properties in calibration of a scanner as is described in [5]. It illustrates that a simple linear multiplicative model of scanner sensor responsivities, illuminant and the reflectances of the target is sufficient to predict the scanner response for diffusely reflecting surfaces. The linear model fails to give a desired description of a scanner system with respect to stray light in imaging processes and surface flourescence of targets. Other problems with calibration like metamerism, flourescence and chromatic adaptation are explained in [6]. The paper argues that for best results, scanners need to output the data in their own color space alongwith its profile information about its sensor response functions.

The effect of measurement noise and the non-colometric nature of the scanner on color measurements is analysed by Sharma and Trussel [7]. Simulations were performed to evaluate the influence of each of these parameters under constant conditions of the other. At low SNR values the measurement noise is an inhibiting factor while at higher values the colorimetric nature of the scanner decides its performance.The paper also investigates the performance improvement with the introduction of a fourth channel in order to obtain multi-illuminant data.

A new measure to evaluate the performance of filters used in color scanners is proposed in [8] by Vora and Trussel. It investigates the effectiveness of the Neugebauer quality factor for filters given by:

$$q(m) = (||P_v(m)||^2)/||m||^2 \tag{2.1}$$

where m is the color filter and $P_v(m)$ is its projection onto the (HVSS)human visual system space. Since this quality factor is defined for one single filter and its value indicates whether ($q = 1$) or not the filter ($q < 1$) is in the HVSS. Although the q=1 for all three filters indicates that they lie in the HVSS, this quality factor does not necessarily imply that the sensitivity functions span the 3 dimensional HVSS, i.e. it does not indicate whether they are linearly independent.Also, unlike the q factor, the measure of goodness ($\nu$) of the scanning filters described in this paper can distinguish among filter sets based on how much the projection approximates the HVSS and it can be extended to more than 3 filters in a set.It is based on mean square error between the original signal and its estimate.This appropriateness of the measure is demostrated using results of experiments involving color sets from a thermal printer, an ink-jet printer, a color copier, and a 64-sample set of Munsell chips.

The evaluation of imaging systems on the basis of their color gamut and related attributes has been elaborately explored in [9].This paper lays down some metrics for performance of device based on its color gamut characteristics like volume, quantization errors etc. The gamut volume is calculated by a tetrahedral tesselation method in the device color space which is converted to the CIE LAB space and the gamut volume is calculated in units of cubic $\Delta E$. This is known as the color encoding gamut. The paper defines the term 'legal colors' as those colors which lie within the spectral locus and have luminance between the black and white values as given by the ICC (PCS)profile connection space.Such a color gamut of legal colors or that of real world surface colors, are termed as target gamuts. Other than suggesting gamut volume of a particular color encoding to be a metric for evaluation of gamut itself, other metricslike the percentage of the target volume contained within this volume and the

percentage of this volume used to encode target gamut are also proposed. Besides, the quantization error which is calculated for a color encoding for every channel (R,G,B) is also a usefule measure for evaluation.

Finally [10] gives a comprehensive study of the previous research work in the feild of digital color imaging systems. It explains fundamental concepts related with color perception and explains mathematical models which describe the imaging devices.

# 3. EXPERIMENTS

The model of the scanner is based on the spectral response of its components and the reflectance spectrum of the target to be scanned. The main components of any scanner system are the lamp and the sensors. The following experiments were performed on Samsung Scanner SCX5330, to determine the spectral responses of the lamp, and its CCD sensors. The reflectance spectra of the color patches on the target to be scanned was also determined.

## 3.1 Lamp Output Spectrum Measurement Using Spectroradiometer

The output spectrum of the lamp of the scanner can be measured using a spectroradiometer 'SpectraScan' PR-705. The PR-705 is a parallel acquisition (fast-scan) spectroradiometer and has a fixed polychromator (diffraction grating), which disperses the majority of the visible spectrum (380 nm to 780 nm ) onto a photodiode array detector.The instrument consists of an eyepiece to view the target, with mechanism for focusing the viewing aperture.

The setup for the experiment is as shown in figure [ 3.1]. A white diffusion standard is used to reflect the light incident from the lamp of the scanner onto the aperture of the spectroradiometer. As illustrated, the diffusion standard is mounted and held over the scan-head slit at an approximate angle of 45 degrees. The spectroradiometer is aligned so that the axis of the eyepiece is perpendicular to the plane of the diffuser. The experiment is performed in a dark room to prevent any other incident light. The scanner lamp is switched on and allowed to be initialised for atleast 10 minutes before starting the measurement. The output of the measurement are the spectral radiance values in Watt/steradian/sq.meter at every 2nm wavelength of light from 380-780nm. These values are converted to a 31x1 vector by taking the values at an interval of

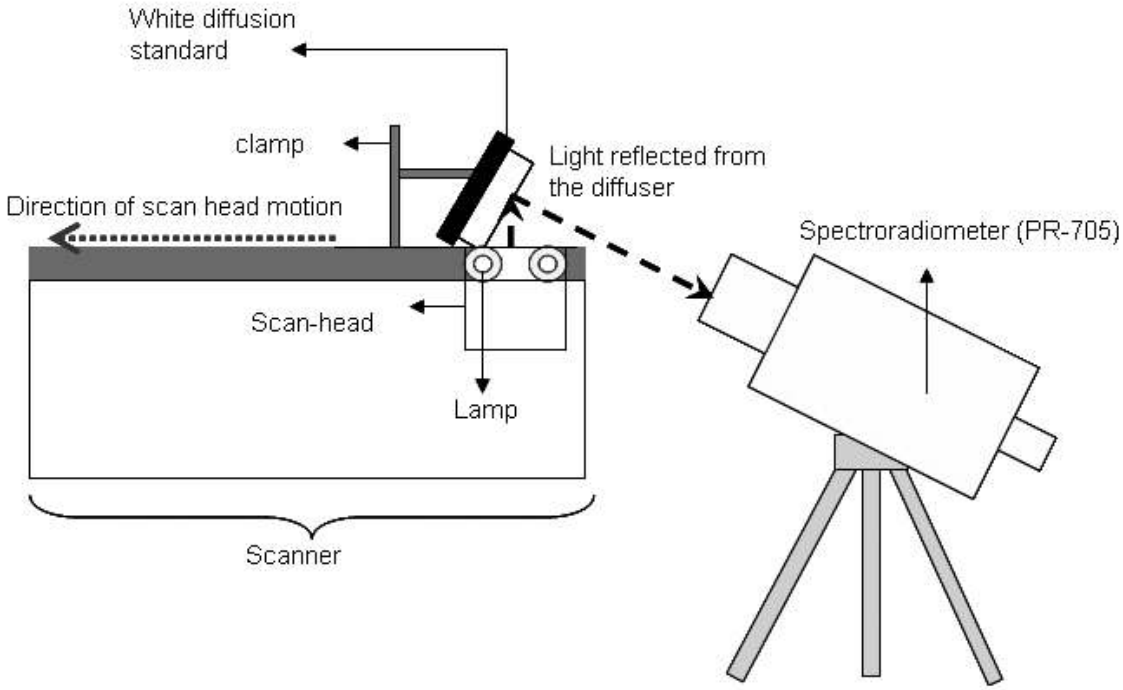


Fig. 3.1. Experimental setup for the measurement of Lamp spectrum

10nm from 400-700nm. They were normalised by dividing each value by the peak value of the lamp radiance spectrum.As shown in figure[ 3.2], this value was obtained at 580nm. This vector represents the lamp spectrum(L) for furture calculations.

The lamp output spectrum obtained is as shown in figure [ 3.2].

## 3.2 Spectral Response of CCD Sensors

During the usual scanning procedure, the light from the lamp is incident on the target to be scanned. This light reflects from the target and falls on the CCD sensors after passing through an optical mirror and lens assembly. For determining the the spectral responses of the sensors, the light beams of wavlengths in the visual range(400-700nm) are made incident directly on the sensors. The Monochromator is one such instrument which has an optical fiber that can output a beam of light of a

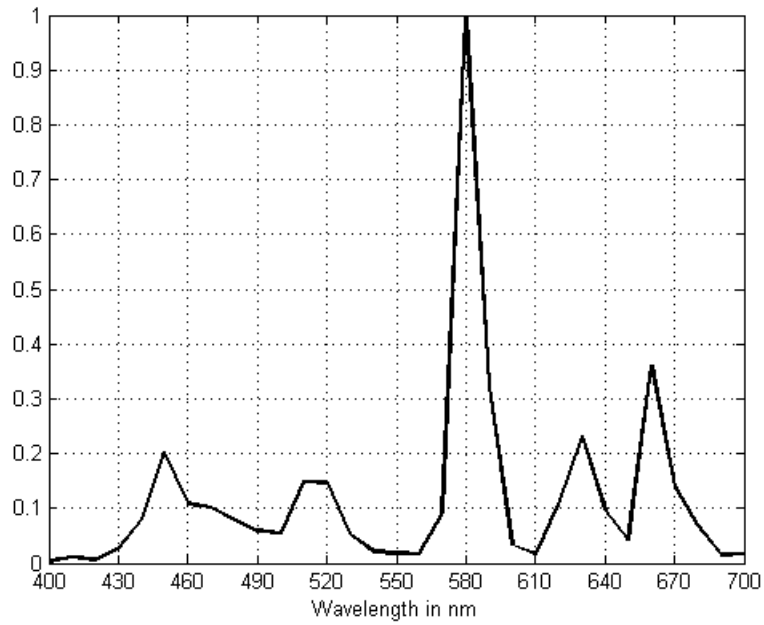


Fig. 3.2. Lamp output spectrum. Y axis shows the normalized values of Lamp spectrum.

particular wavelength. The monochromator SP-150 was used in this experiment to output wavelengths in the range 300nm to 700nm at intervals of 10nm.

### 3.2.1 Experimental Setup

The experimental setup for the experiment is shown in figure [ 3.3]. The optical fiber is held perpendicular to the plane of the glass of the scanner using a mechanical clamp. The Experiment was performed under the following conditions:

1. The light beam from the monochromator is incident perpendicular to the plane of the slit of the scan-head.

2. The Lamp of the scanner is turned off during this experiment. This is done by modifying the code of the scanner DSP.

3. The experiment is performed in a dark room.

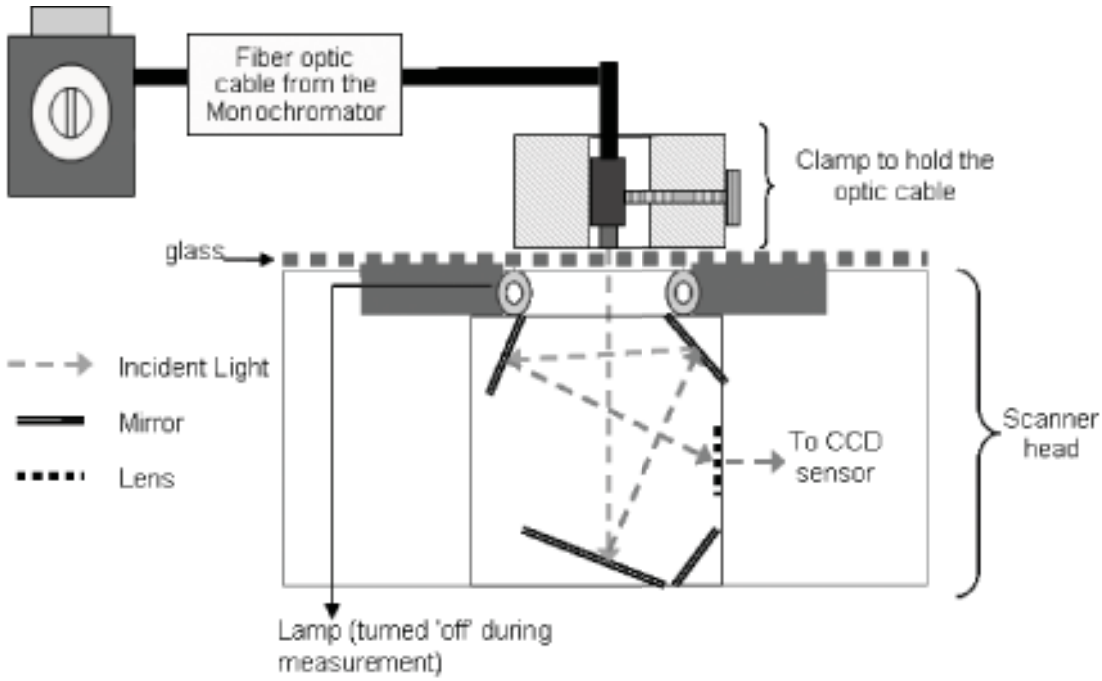


Fig. 3.3. Experimental setup for the measurement of Spectral sensitivity functions of the CCD sensors in the scanner head.

4. The Gamma setting on the scanner is turned 'on' and the shading correction is turned 'off'.

5. The dpi setting of the scanner is set to '150 dpi'.

6. Scanner is operated in the 'document feed' mode.

In the 'document feed' mode the scanner head remains fixed at one end of the glass top while the document to be scanned is fed from the upper tray and removed automatically from the lower tray. For the purpose of this experiment however, there is no document to be scanned, but the fixed position of the scan-head is a useful feature for ease of the apparatus setup. The monochromator input specifications, like the wavelength in (nm)nanometers is set using the its SpectraPro software. For every 10 wavelengths within the visual range of 400-700nm, the scans are taken and stored in the uncompressed TIFF format.

The intensity setting of the monochromator output was heuristically determined for each channel, to ensure maximum use of the dynamic range of possible R,G,B values of the colors obtained in the scanned image. The scanned image consists of a column of a particular color as sensed by the sensor, approximately 3-4 pixels in width and running along the length of the page. The R,G,B color values read from the TIFF file of such an image is different for each input wavelength of the monochromator. These gamma-corrected R,G,B values determine the response of the CCD sensor. The sensor response before any calibration is applied to the channel data is shown in figure [ 3.4].

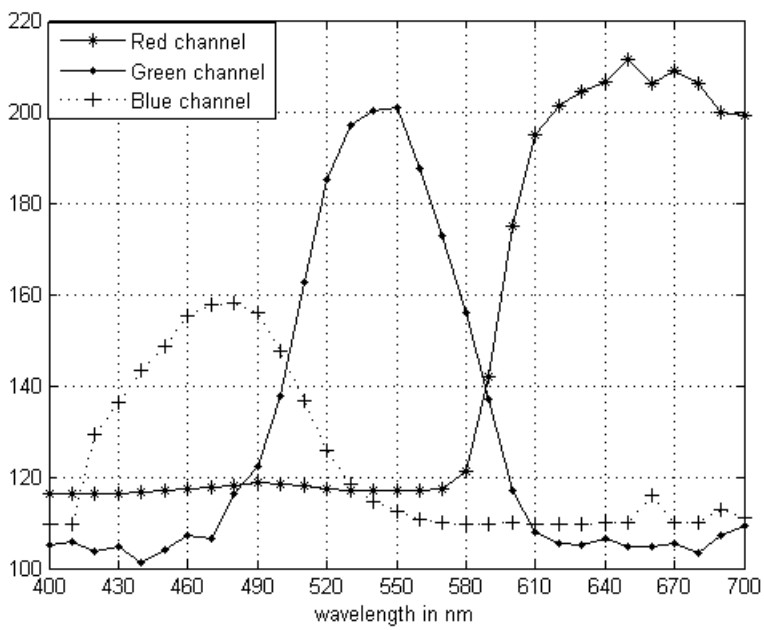


Fig. 3.4. The uncalibrated response of the Scanner with lamp 'off',to the monochromator input.

### 3.2.2 Black Offset

The 8-bit R,G,B data values that are obtained from the scanned images have a lowest value of approximately 100. This low value of 100 corresponds to the dark

current value or the RGB values corresponding to a black color measured with the scanner lamp turned off. During the normal operation of the scanner, this correction, known as a 'shading correction', is performed internally by the Image Processing (IP controller) chip. However for the purpose of this experiment the scanner mode was set to shading off and gamma on. Hence the RGB values obtained from the scanner in this mode, need to be linearized. This procedure is explained further, and will be covered more in detail in the next chapter.

### 3.2.3 Linearization of the R,G,B Values

The linearization procedure accounts for the gamma correction that has been internally applied by the IP controller, and the removal of the black offset value. The linearization procedure is the same as will be described in section [ 4.2.1] except that, now, the neutral gray patches of Kodak Q60 target are scanned with gamma 'on' and shading 'off' setting of the scanner.

### 3.2.4 Monochromator Calibration

*Intensity calibration*: This calibration procedure is necessary to correct for the changes in the intensity of the output of the monochromator with each wavelength.

For this purpose, the variation in the intensity of monochromator output beam of light is measured at a fixed manual setting of the intensity, and the spectroradiometer PR 705 is used. The spectroradiometer measures the intensity of each beam of light output from the monochromator taken at every 10nm from 400-700nm and reflected off a white diffusion standard target. As shown in figure[ 3.5], even at a fixed setting of the output intensity, the actual output intensity shows a significant variation in output value from 400nm to 700nm wavelength. The experimental setup for this calibration procedure uses the monochromator, the diffusion standard and the spectroradiometer.It does not use the scanner.

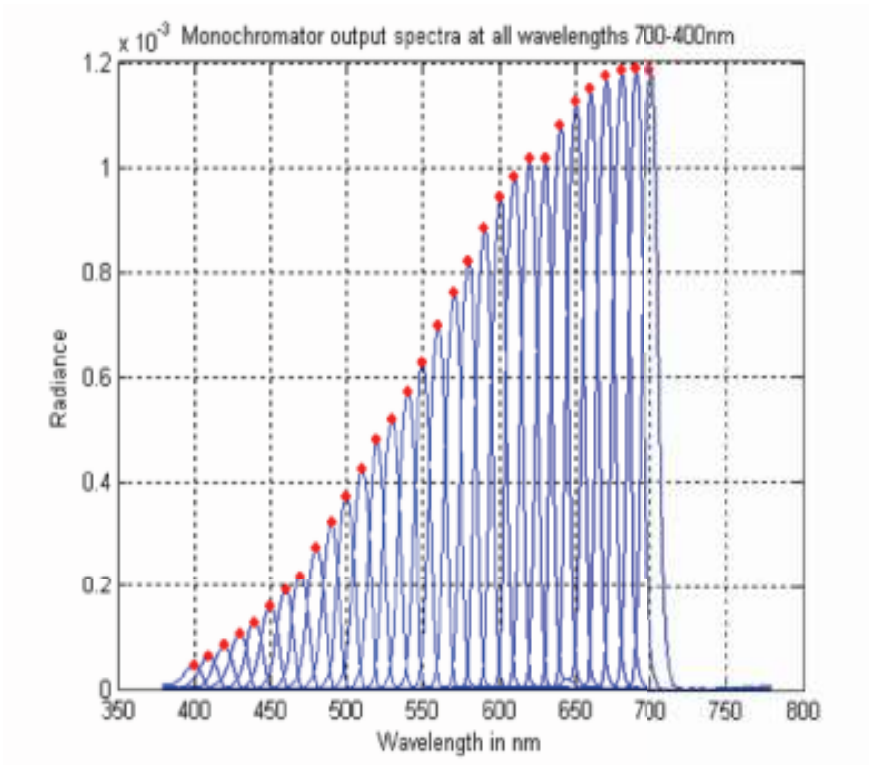


Fig. 3.5. Intensity variation in the output of monochromator with wavelength.

The highest value of intensity measured by the spectroradiometer for a particular wavelength is used to find the scaling factor for all other wavelengths in the 400-700nm range.

Scaling factor at wavelength $\lambda$ is given by,

$$SF_\lambda = (highest \quad intensity)/(Intensity \quad at \quad \lambda) \tag{3.1}$$

The scaling factors so obtained are then multiplied with the respective output values at each wavelength. The maximum scaling factor is as high as 27 for the 400nm output of the monochromator

The spectral sensitivities of the 3 sensor channels are shown in figure [ 3.6].

The spectral sensitivity functions of the sensor in the scanner after calibration, are recorded as 3, 31x1 vectors corresponding to R channel, G channel and the B channel respectively. These are put together in a 31x3 spectral sensitivity matrix [F].

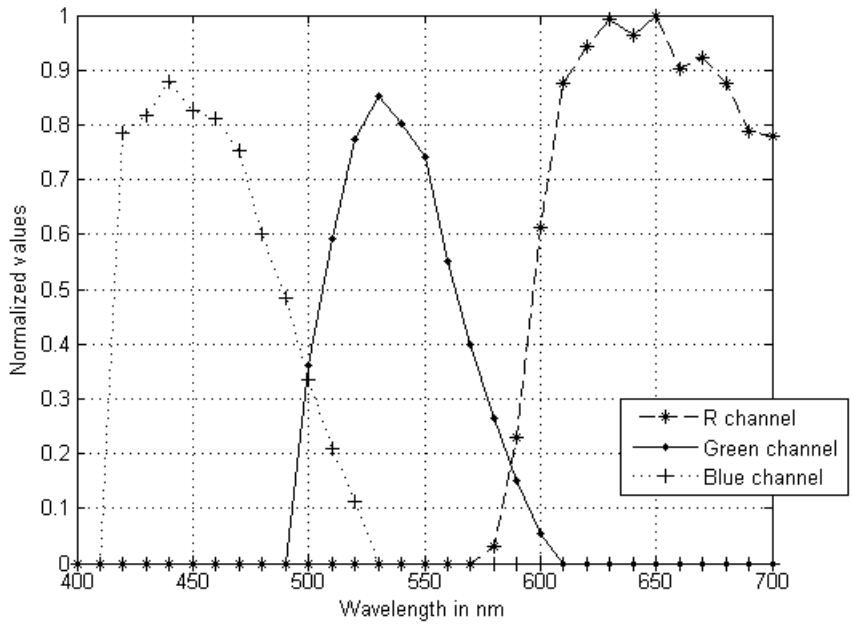


Fig. 3.6. Spectral sensitivity functions of the sensor after calibration.

## 3.3 Measurement of the Spectral Reflectance of the Patches on the Kodak Q60 Target

The Spectral reflectance of the patches can be measured by any of the two methods described below:

### 3.3.1 Method 1:Using X-Rite Spectrophotometer

The X-Rite Spectrophotometer can be used to measure the reflectance spectrum of all the color patches on the target-KodakQ60. The target layout file for X-Rite can be created by specifying the dimensions of each of the color patches of the target (KodakQ60 in our case)and the number of patches. The reflectance spectrum is obtained as a vector with 31 values corresponding to each wavelength from 400-700nm in intervals of 10nm. The X-Rite output file also gives the CIE XYZ as well as the L*a*b* values, under the D65 illumination conditions for the target to be measured.

### 3.3.2 Method 2: Using Spectroradiometer 'SpectraScan' PR705

The measurement is done by aligning the measuring aperture and focussing it to view one color patch of the KodakQ60 target at a time, through the eyepiece. The experiment is performed in the Macbeth SpectraLight II viewing booth with 'daylight' illumination settings. The Spectral radiance (in W/sr/sq.meter) of the color patch is recorded at every 2nm wavelength between 380-780nm.

The figure[ 3.7] shows the spectral measurements for a set of blue patches on the Kodak Q60 target as measured by the X-Rite (figure [ 3.7(a)]) and the spectroradiometer respectively (figure [ 3.7(b)]) normalized with respect to the white patch reflectance spectral values at each wavelength. Figure[ 3.7(c)] shows the white patch reflectance values.

In this work, method 1 was used to measure the reflectance spectra of the patches.

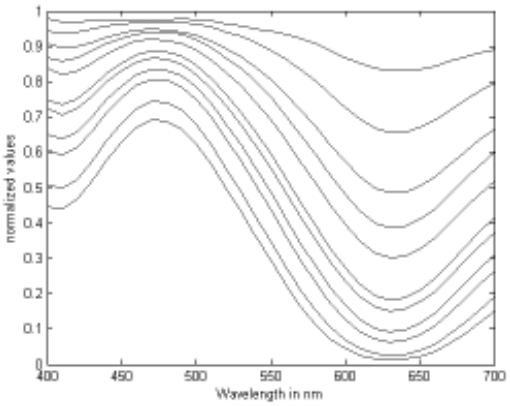


(a) Normalized spectral data using X-Rite

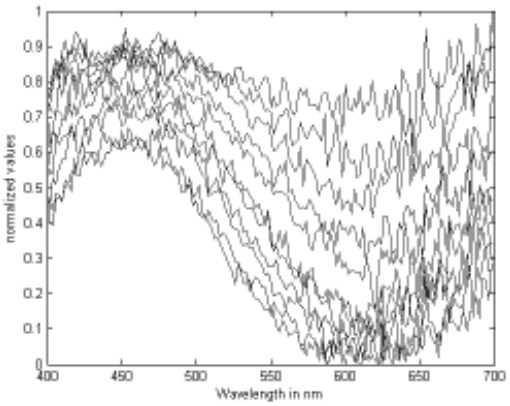


(b) Normalized spectral data using PR-705

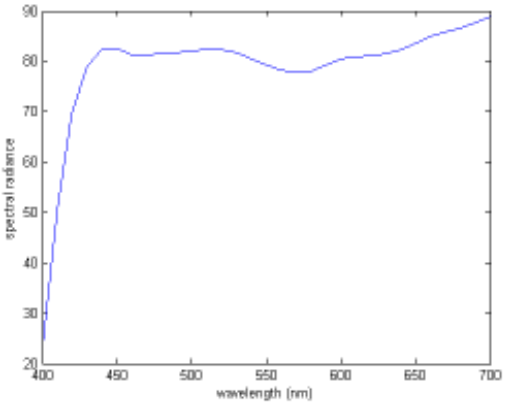


(c) Reflectance Spectrum of White Patch

Fig. 3.7. Spectral Reflectance of KodakQ60 patches.

# 4. MODELS OF CHARACTERIZATION

In this chapter the procedure to characterize a scanner is explained. 2 models of characterization have been implemented based on the hardware components of the scanner and the measured values from it, respectively. They are:

1. Lamp-Reflectance-Sensor Model
2. Regression-Based Model

## 4.1 Lamp-Reflectance-Sensor Model

### 4.1.1 Characterization

As mentioned previously, the scanner consists of 2 main components, namely the lamp and the CCD sensors. Whenever a target to be scanned is placed on the glass top of the scanner, the light from the lamp is incident on the target. This incident light is reflected by the target onto the CCD sensors in the scan-head as a function of the reflectance spectrum of the target. Finally, the R,G,B values measured by the scanner for a particular color patch on the target are a function of the spectral sensitivity responses of the CCD sensors. This model is illustrated in the figure [ 4.1]. As shown $[L]$ is a diagonal matrix with the normalized lamp spectrum values measured by the procedure given in previous chapter, as its diagonal elements. The reflectance matrix $[R]$ is a matrix with the normalized reflectance spectra of the patches on the KodakQ60 target. The Kodak Q60 IT8.7.2-1993 (for reflection materials) target contains 262 colored patches numbered from 1-22 and rows A-L. Out of the 262, 240 have a constant color and are usable by specifying their 1x31 reflectance vector each. The target also contains 24 patches with gradually varying gray shade value from (white) patch number 1 to (black) patch number 24. The normalization of the

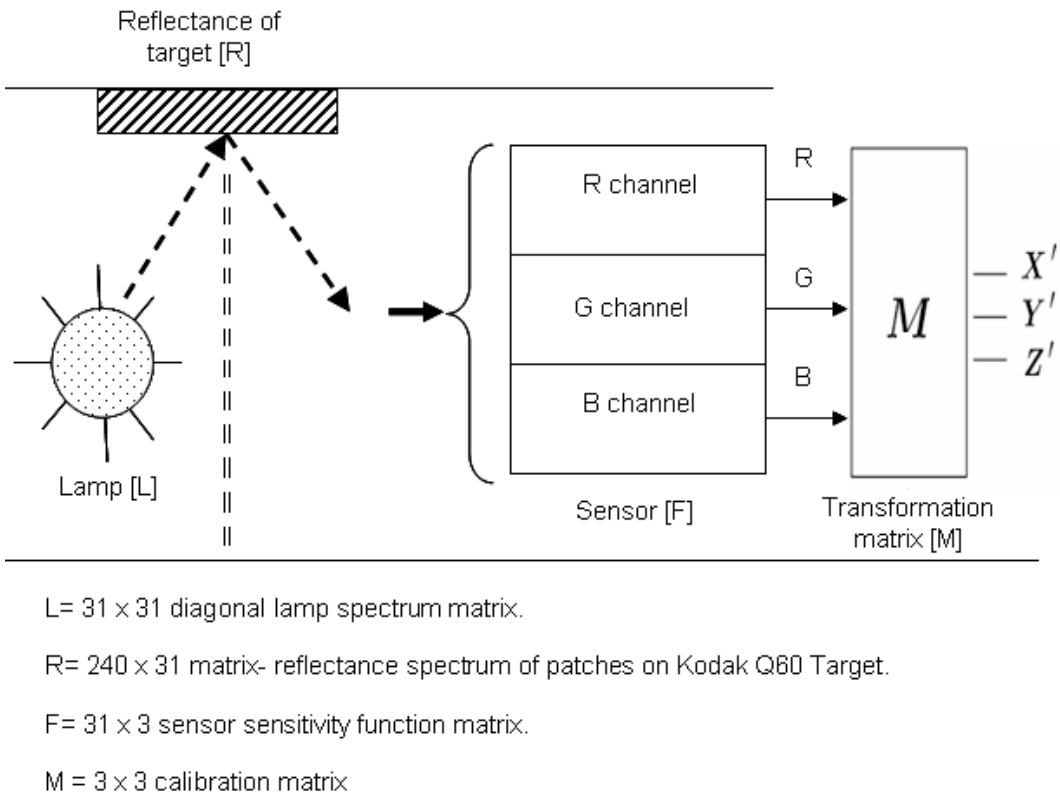


Fig. 4.1. Lamp-Reflectance-Sensor model of the scanner.

reflectance spectrum values for each patch is done with respect to the white patch spectral values. Finally, the $[F]$ matrix describes the spectral sensitivity response curves as obtained by the procedure described in section[ 3.2] The scanner response to any color stimulus is described in terms of a simple multiplicative model with these 3 matrices. If $[S]$ is the response matrix which contains the RGB values of the 240 color patches scanned, it is given by:

$$[S]^T = [R][L][F] \tag{4.1}$$

where

$$S^T = \begin{bmatrix} R_1 & G_1 & B_1 \\ . & . & . \\ . & . & . \\ R_n & G_n & B_n \end{bmatrix}_{n\times 3}, R = \begin{bmatrix} r_1(\lambda_1) & . & . & . & r_1(\lambda_{31}) \\ r_2(\lambda_1) & . & . & . & r_2(\lambda_{31}) \\ . & . & . & . & . \\ . & . & . & . & . \\ r_n(\lambda_1) & . & . & . & r_n(\lambda_{31}) \end{bmatrix}_{n\times 31} \tag{4.2}$$

,

$$L = \begin{bmatrix} l(\lambda_1) & .. & .. & .. & .... \\ .. & l(\lambda_2) & .. & .. & .... \\ .. & .. & .. & .. & .... \\ .. & .. & .. & .. & l(\lambda_{31}) \end{bmatrix}_{31\times 31} andF = \begin{bmatrix} f_1(\lambda_1) & f_2(\lambda_1) & .f_3(\lambda_1) \\ f_1(\lambda_2) & f_2(\lambda_2) & .f_3(\lambda_2) \\ . & . & . \\ f_1(\lambda_{31}) & f_2(\lambda_{31}) & f_3(\lambda_{31}) \end{bmatrix}_{31\times 3} \tag{4.3}$$

n=240 represents the number of color patches on the target. $f_1, f_2, f_3$ are the spectral sensitivity functions, $r_1$ to $r_n$ are the reflectance spectra of n patches and l is the lamp spectrum values; defined for each wavelength $\lambda$

### 4.1.2 Finding the Calibration M atrix M

Matrix [S] contains the RGB values of the Kodak Q60 target as predicted by the model of the scanner just described. However these RGB values belong to a device dependent color space which is specific to the scanner in consideration. In order to determine the actual colors that the scanner RGB values represent, it is necessary to find a transformation that transforms them to device independent space co-ordinates. The device independent color space in this case is the CIE XYZ space and the transformation matrix will be called $[M]_{model}$. As described in section[ 3.3.1] the X-Rite spectrophotometer also gives the CIE XYZ values for the Kodak q60 patches alongwith their reflectance spectra. These XYZ co-ordinates are calculated with respect the D65 illumination standard. These XYZ co-ordinates corresponding to the 240 color patches are stored in matrix [X]. To determine the tranformation from

device RGB to XYZ, we now have the following set of equations in an overdetermined system

$$[X] = [M]_{model}[S] \tag{4.4}$$

here,

$$X = \begin{bmatrix} X_1 & X_2 & .. & X_n \\ Y_1 & Y_2 & .. & Y_n \\ Z_1 & Z_2 & .. & Z_n \end{bmatrix}_{3\times n} andM = \begin{bmatrix} m_{11} & m_{12} & m_{13} \\ m_{21} & m_{22} & m_{23} \\ m_{31} & m_{32} & m_{33} \end{bmatrix}_{3\times 3} \tag{4.5}$$

We use the least squares approximation to estimate the transformation matrix $[M]_{model}$ as follows:

$$[M]_{model} = [X][S]^T([S] * [S]^T)^{-1} \tag{4.6}$$

In order to evaluate the accuracy of this transformation, we need to compare the actual XYZ values of the patches as measured by the X-Rite spectrohotometer to those transformed using matrix $M_{model}$ from the model. For this purpose we determine the CIE $L^*a^*b^*$ values from the XYZ using the standard transformation equations. We then compute the average $\Delta E$ error for all the 240 patches. If $L_{act}$ $a_{act}$ and $b_{act}$ are the actual CIE $L^*$,$a^*$,$b^*$ values of the patches calculated from their XYZ and $L_x$ $a_x$ and $b_x$ represent the $L^*$,$a^*$,$b^*$ values calculated from the $transformed$ XYZ values then,

$$\Delta E^*_{ab} = \sqrt{(L_{act} - L_x)^2 + (a_{act} - a_x)^2 + (b_{act} - b_x)^2} \tag{4.7}$$

## 4.2 Regression Based Method

The transformation matrix from the scanner RGB to the CIE XYZ can also be calculated based on what is known as the regression method. In this method the scanner system is considered to be a black box without assuming any prior information about the characteristics of any of its components. The only data accessible to build

the model is the RGB output values as recorded by the scanner for a particular set of color patches. In this case, the training set is the KodakQ60 target with 240 color patches and 24 gray scale patches, as mentioned before. As given in [1] the transformation can be divided into two parts:

1. Calibration

2. Characterization

Figure [ 4.2]illustrates the model. $R_\gamma$, $G_\gamma$, $B_\gamma$ are the scanner output RGB values for the training set of color patches and $R_l$, $G_l$, $B_l$ represent the calibrated values.

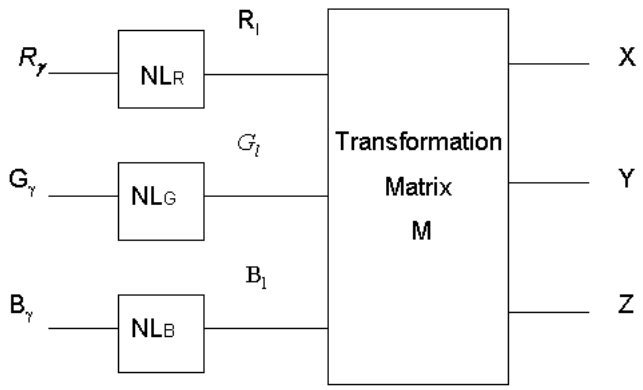


Fig. 4.2. Regression based model.

### 4.2.1 Calibration

This process involves determining the nonlinear relation between the scanner RGB values measured after gamma and shading correction in the scanner and the linear RGB values which represent the response of the scanner sensor system. In the figure, 'NL' represents this nonlinear relationship. In order to determine this relationship, the 24 neutral gray scale patches on the KodakQ60 target are scanned. The first patch represents the minimum density patch or $D_{min}$ and the last or rightmost is the

$D_{max}$. The patches on the kodak target are such that the luminosity L* value varies approximately linearly with each patch from 87 on the left to 5 on the right, for the 22 patches in between $D_{max}$ and $D_{min}$. The known Y values of these patches are used to find the gray balance curves for the red, green and the blue channels. The target is scanned at 600dpi on the scanner and the R,G,B values for each patch is computed as the average of all the pixel values within each patch. The nonlinear relationship for this curves can be approximated by a power law equation as follows, where $R_l$ is the linearized R output value measured for a patch.

$$R_l = a * (R/255)^b + c \quad where \quad R_l = Y/100 \tag{4.8}$$

Similarly we find the non-linear relationship parameters a,b,c for G and B channels. We have used the matlab function 'cftool' for this purpose. The nonlinear relations are plotted in figure [ 4.3].The points marked by *, . and + are the actual measured values of R,G,B while the curves in each figure are plotted using the parameters estimated from the equation given by 4.8. These are called the gray balance curves for the 3 channels.

### 4.2.2 Characterization

Characterization is the process of finding the transformation from device dependent color space to device independent color space. They are of 2 types namely, forward characterization and inverse characterization.We perform the inverse characterization for the scanner system. We obtain the linear RGB values for the 240 color patches using the a,b,c parameters determined by 4.8 in the calibration procedure. The aim of this step is to find a transformation from these linear RGB values to CIE XYZ co-ordinates. Again, as mentioned previously, the CIE XYZ values for the target are obtained as the output of the spectrophotometer. If the matrix $[X]_{240\times3}$ contains these values and the matrix $A_{240\times3}$ containd the linear RGBs, then the transformation matrix is given by $[M]_{reg}$

$$[X] = [A][M]_{reg} \tag{4.9}$$

$[M]_{reg}$ is calculated as a least squares solution to the above equation as follows:

$$[M]_{reg} = ([A]^T * [A])^{-1}[A]^T[X] \tag{4.10}$$

This model was applied to determine RGB to XYZ transformation matrix for Samsung, Epson and HP scanners. The results are presented in the following chapter.

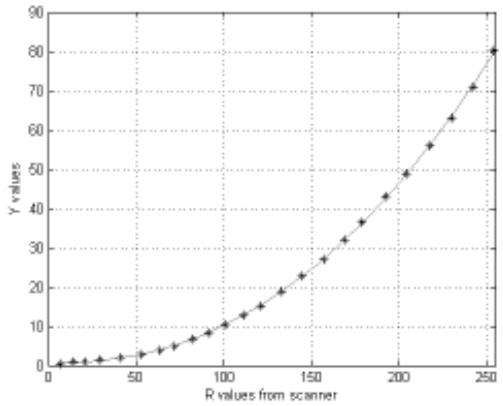


(a) R values('*')and the estimated curve fit.

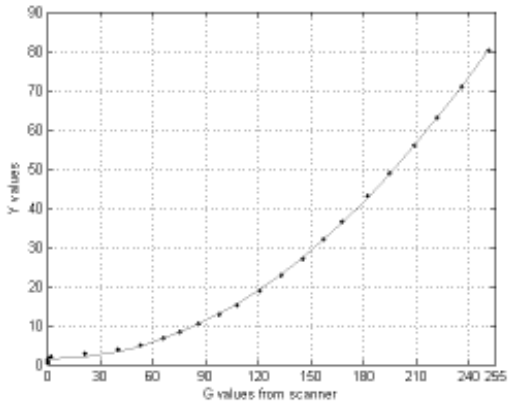


(b) G values('.')and the estimated curve fit.

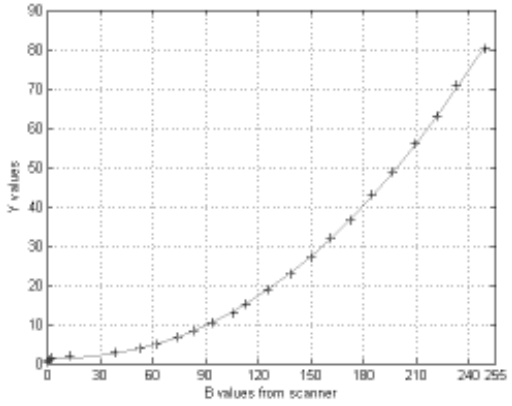


(c) B values('+')and the estimated curve fit.

Fig. 4.3. Gray Balance curves.

# 5. RESULTS

The results of the 2 methods of characterization of scanners as described previously, are presented in this chapter. Section 5.1 gives the transformation matrices obtained by the model method for the Samsung scanner SCX5530 and the corresponding $\Delta E$ values. The results of the regression based method applied to the Samsung, HP and Epson scanners are presented in section 5.2. Section 5.3 shows the chromaticity plots in the x-y chromaticity plane and 3D gamuts and the L slices of the 3D gamuts in the $L^*a^*b^*$ space for the Samsung, HP and Epson scanners. Finally section 5.4 gives a comparative summary of the 3 scanners based on color volume and quantization error metrics.

## 5.1 Results of Model Based Method

The transformation matrix from linearized scanner RGB to CIE XYZ obtained for the Samsung scanner based on the model based method using the spectral sensitivity functions, lamp output response and the spectral reflectance of color patches of the KodakQ60 target is given below:

$$M_{model} = \begin{bmatrix} 0.0756 & 0.1421 & 0.0508 \\ 0.0153 & 0.3092 & 0.0071 \\ 0.0076 & -0.0320 & 0.4459 \end{bmatrix} \tag{5.1}$$

As mentioned previously, the $\Delta E$ values which represent the error between the estimated values (using the transformation) and the actual measured values (using spectrophotometer) are calculated for each of the 240 color patches. The average $\Delta E$ is calculated for all these patches and presented below.

$$Average\ value\ of\ \Delta E = 4.205 \tag{5.2}$$

$$Maximum\ value\ of\ \Delta E = 19.202 \tag{5.3}$$

The figure [ 5.1] shows a histogram of the $\Delta E$ values with respect to the number of color patches. It can be seen that out of 240 color patches on the target,approximately 115 patches have an error below 3 $\Delta E$ units.

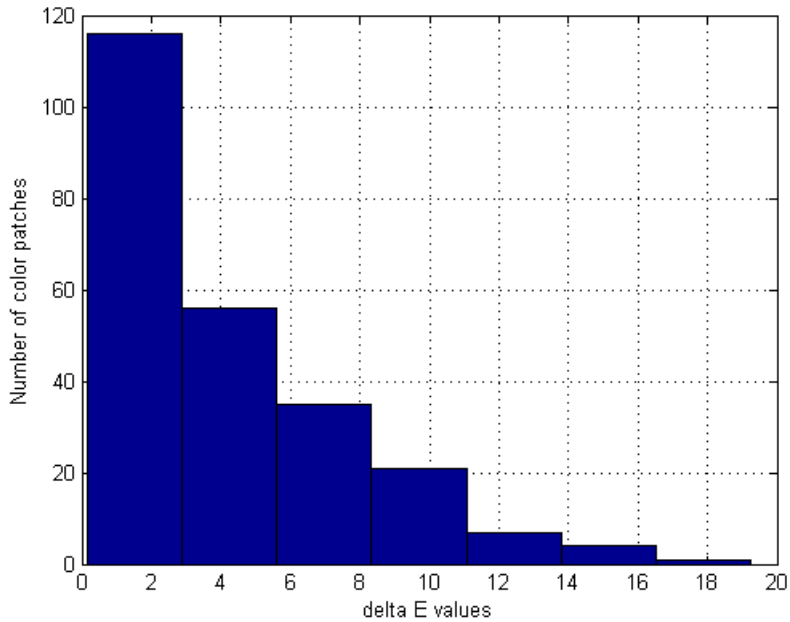


Fig. 5.1. Histogram of Delta E values for model based method.

## 5.2 Results of Regression Based Method

The regression based method was used to characterize the Samsung, HP and the Epson scanners to obtain the RGB to CIE XYZ transformation matrices. The table [ 5.1] gives the mean and the maximum $\Delta E$ values for each of these scanners corresponding to the matrices as given below.

Table 5.1
Comparison of $\Delta E$ values for the 3 scanners.

| Scanner | Mean $\Delta E$ | Max $\Delta E$ |
|---|---|---|
| Samsung | 3.875 | 18.1873 |
| HP | 3.6985 | 13.3051 |
| Epson | 2.4328 | 15.2498 |

$$M_{Samsung} = \begin{bmatrix} 0.4985 & 0.2723 & 0.1465 \\ 0.2250 & 0.6937 & 0.0459 \\ 0.0098 & -0.1211 & 1.1541 \end{bmatrix} \tag{5.4}$$

$$M_{HP} = \begin{bmatrix} 0.5130 & 0.3391 & 0.1406 \\ 0.2756 & 0.6413 & 0.1013 \\ 0.0267 & 0.4250 & 0.7643 \end{bmatrix} M_{Epson} = \begin{bmatrix} 0.5610 & 0.2819 & 0.0898 \\ 0.2902 & 0.6256 & 0.0453 \\ 0.0339 & 0.1539 & 0.5849 \end{bmatrix} \tag{5.5}$$

## 5.3 Gamut Plots

### 5.3.1 Chromaticity Diagram

Figure[ 5.2] shows the x-y chromaticity plots for the three scanners with respect to the HVS chromaticity diagram. The chromaticities correspoding to the primaries: [1 0 0], [0 1 0] and [0 0 1] of the three scanners are calculated from their respective transformation matrices.

### 5.3.2 3D Gamuts

Figures [ 5.3] show the 3D color gamuts of Samsung, HP and Epson scanners respectively, in 3D $L^*a^*b^*$ space.

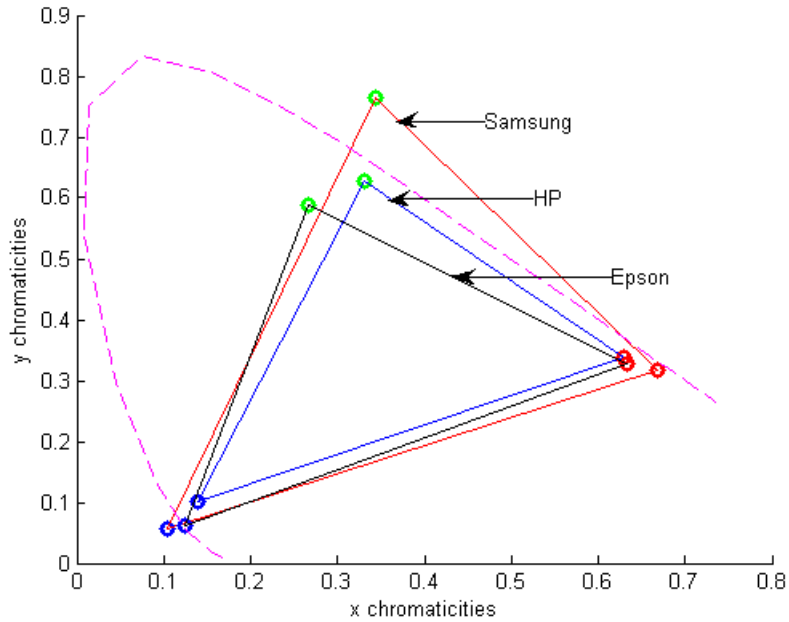


Fig. 5.2. Chromaticity diagram for the 3 scanners.

### 5.3.3 Plots of Slices of the 3D Gamut in $L^*$

The figures [ 5.4] show the plots of the slices of 3D color gamuts in the $L^*$ axis for the 3 scanners. The horizontal axis represents the b* values while the vertical exis represents the a* values of the gamut points.

## 5.4 Comparison of scanners

### 5.4.1 Gamut Volume

The volume of the 3D solid gamuts is calculated in CIE $L^*a^*b^*$. The method uses the tetrahedral tesselation of the cube in the scanner RGB space [9]. Each of the vertices of the tetrahedrons are then converted to the CIE $L^*a^*b^*$ space using the transformation matrices from the regression method and the volume is calculated in cubic $\Delta E$ units. The sum of the volumes of all the tetrahedrons is the total gamut

Table 5.2
Comparison of Gamut volumes for the 3 scanners.

| Scanner | Gamut Volume in cubic $\Delta E$ units |
|---|---|
| Samsung | 2,012,700 |
| HP | 819,700 |
| Epson | 780,370 |
| sRGB space | 811,180 |
| Adobe RGB space | 1,186,315 |

volume. The table [ 5.2] gives the comparison of volumes for the Samsung, HP, Epson desktop, the sRGB color space and the Adobe RGB color space in cubic $\Delta$ E units.

### 5.4.2 Quantization Error

The quantization error is calculated for each channel using the method given in [9].For all the patch values of the Kodak Q60 target, a list of values which lie in the gamut is recorded. For all these in gamut points, the corresponding R,G,B values are calculated using the transformation matrix. Once the R,G,B values are obtained, each value is incremented by 1 in the RGB color space and transformed back to CIE L*a*b* space. Now, the difference between the Lab values of the original points and those corresponding to the incremented values gives the quantization error. This procedure is repeated for each channel separately and the quantization error for each channel is obtained. The table [ 5.3] gives the quantization error values for Samsung, Epson and HP scanners.

Table 5.3
Quantization Errors for the 3 scanners.

| Scanner | R channel | | G channel | | B channel | |
|---|---|---|---|---|---|---|
| $\Delta E$ | Mean | Max | Mean | Max | Mean | Max |
| Samsung | 2.83 | 12.81 | 4.35 | 17.33 | 3.15 | 12.06 |
| HP | 1.64 | 9.66 | 2.58 | 12.28 | 1.96 | 9.21 |
| Epson | 2.24 | 11.02 | 3.30 | 14.41 | 1.72 | 7.65 |

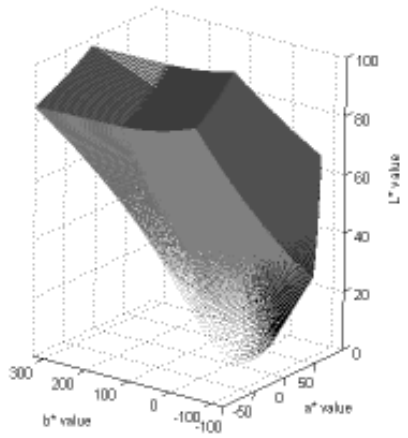


(a) 3D gamut solid for Samsung scanner

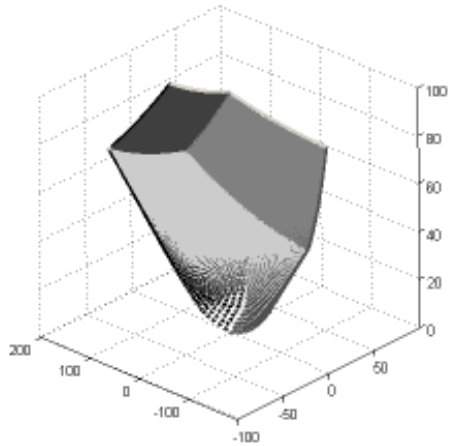


(b) 3D gamut solid for HP scanner

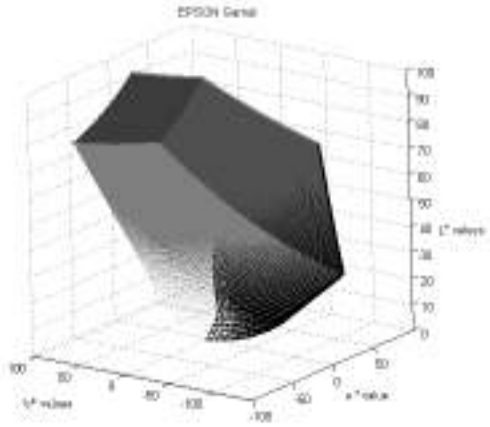

(c) 3D gamut solid for Epson scanner

Fig. 5.3. 3D gamuts in $L^*a^*b^*$. The axes are labelled in the figures.

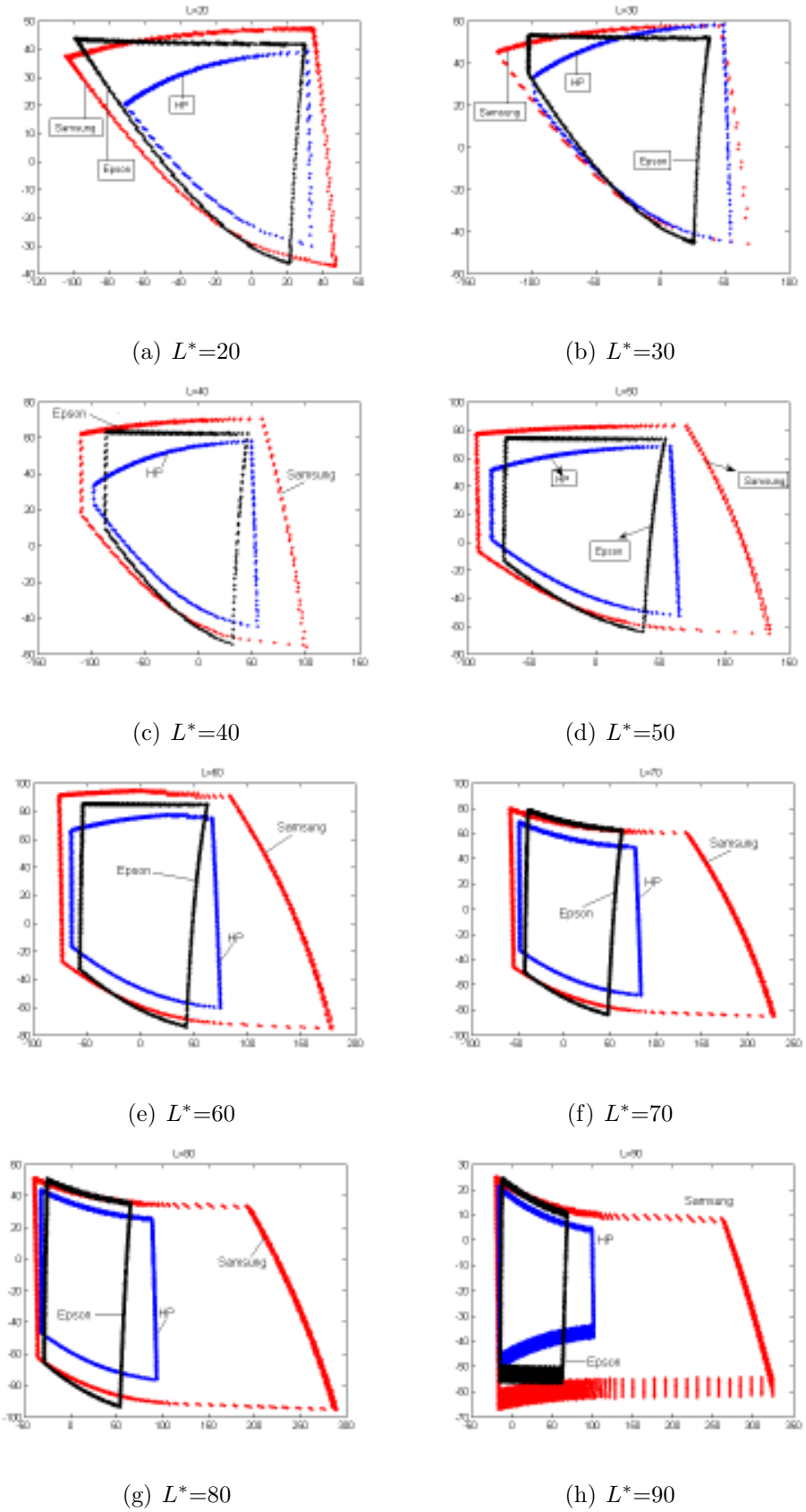


(a) $L^*$=20

(b) $L^*$=30

(c) $L^*$=40

(d) $L^*$=50

(e) $L^*$=60

(f) $L^*$=70

(g) $L^*$=80

(h) $L^*$=90

Fig. 5.4. Gamut slices in $L^*$.

# 6. CONCLUSIONS

The $\Delta E$ errors indicate that the regression based method performs slightly better than the model based method for the Samsung scanner system.

The 3D gamut plots of the three scanners show that the Samsung scanner has a wider gamut, elongated in the b* direction for higher values of L*. In comparison, the HP and Epson scanners are smaller. This phenomenon is clearly observed in the L* slices plots of the 3 scanners where the plots from L*=60 to L*=90 show the elongated Samsung gamut when compared with the other 2 scanners. The x-y chromaticity plot for Samsung extends beyond the human spectral locus for the green primary, and is larger in size compared with the HP and Epson scanners.

The relative sizes of the gamuts are indicated by the gamut volume metric. This metric has the largest value for the Samsung scanner followed by HP and Epson respectively.

The quantization errors are largest for the Samsung scanner for all the three channels. Epson has the higher quantization errors for R and G channel as compared with HP.

# LIST OF REFERENCES

# LIST OF REFERENCES


[1] G. Sharma, *Digital Color Imaging Handbook*. CRC press, 2003.

[2] H. J. L. H. Zhihong Pan, Noyes Ying X., "Color scanner characterization with scan targets of different media types and printing mechanisms," *Proceedings of SPIE, the International Society for Optical Engineering ISSN0277-786X,vol.4300,pp.58-63*, 2001.

[3] M. A. Wencheng Wu, Jan P. Allebach, "Imaging colorimetry using a digital camera," *Journal of Imaging Science and Technology*, July/August 2000.

[4] D. Ng and M. A. Jan P. Allebach, "Non-contact imaging colorimeter for human tooth color assessment using a digital camera," *Journal of Imaging Science and Technology*, November/December 2003.

[5] B. A. W. Joyce E. Farrell, "Scanner linearity," *Journal of Electronic Imaging 2(3),225230*, (July 1993).

[6] R. E. Burger, "Device-independent color scanning," *Proc. SPIE, Vol. 1909, 70*, (1993).

[7] G. Sharma and H. Trussell, "Color scanner performance trade-offs," *Proc. SPIE, Vol. 2658, 270*, (1996).

[8] P. L. Vora and H. J. Trussell, "Measure of goodness of a set of color-scanning filters," *J. Opt. Soc. Am. A*, July 1993.

[9] K. S. G. Braun, "Method for evaluating the color gamut and quantization characteristics of output-referred extended-gamut color encodings," *IS and T/SID 10th Color Imaging Conference*, (November 2002).

[10] J. T. Gaurav Sharma, "Digital color imaging," *IEEE transactions on Image Processing*, (July 1997).

[11] Wyszecki and Stiles, *Color Science Concepts and Methods Quantitative Data and Formulae*.

[12] P. U. Prof.Jan Allebach, *ECE 638 Principles of Digital Color Imaging Systems - notes*.

[13] P. U. Prof.Charles Bouman, *ECE 637 Image Processing - notes*.

[14] P. L. Vora and H. J. Trussell, "Measure of goodness of a set of colour scanning filters," *J. Optical Soc. of Am*, July 1993.

[15] G. S. Bong-Sun Lee, Raja Bala, "Scanner characterization for color measurement and diagnostics," *Journal of Electronic Imaging 16(4)*, (OctDec 2007).

[16] H. J. Trussell, "Dsp solutions run the gamut for color systems," *IEEE Signal Pro- cessing Magazine*, April 1993.

[17] I. Gaurav Sharma, Member and I. H. Joel Trussell, Fellow, "Figures of merit for color scanners and cameras," *IEEE TRANSACTIONS ON IMAGE PROCESSING*, JULY 1997.