Purdue University
Purdue e-Pubs

International High Performance Buildings Conference

School of Mechanical Engineering

2010

Feasibility Study of Indoor Light Energy Harvesting for Intelligent Building Environment Management

Qian Huang
Department of Building Construction Management

Chao Lu
Department of Electrical and Computer Engineering

Mark Shaurette
Department of Building Construction Management

Follow this and additional works at: http://docs.lib.purdue.edu/ihpbc

Huang, Qian; Lu, Chao; and Shaurette, Mark, "Feasibility Study of Indoor Light Energy Harvesting for Intelligent Building Environment Management" (2010). *International High Performance Buildings Conference.* Paper 18.
http://docs.lib.purdue.edu/ihpbc/18

This document has been made available through Purdue e-Pubs, a service of the Purdue University Libraries. Please contact epubs@purdue.edu for additional information.
Complete proceedings may be acquired in print and on CD-ROM directly from the Ray W. Herrick Laboratories at https://engineering.purdue.edu/Herrick/Events/orderlit.html

Feasibility Study of Indoor Light Energy Harvesting for Intelligent Building Environment Management

Qian Huang[1*], Chao Lu[2], Mark Shaurette[1]

[1]Purdue University, Department of Building Construction Management
West Lafayette, Indiana, United States
huang168@purdue.edu, mshauret@purdue.edu

[2]Purdue University, Department of Electrical and Computer Engineering
West Lafayette, Indiana, United States
lu43@purdue.edu

* Corresponding Author

ABSTRACT

In recent years, the design of high performance green buildings is an active area of research. Among various potential techniques, the use of a wireless senor network (WSN) provides an intelligent solution to control and management of the building environment by adaptively adjusting temperature, artificial lighting, humidity, air quality, etc. It has been reported that the deployment of WSN based control systems can result in around 20% savings in energy usage and play a crucial role in green buildings. To simplify installation, retrofit WSN systems are conventionally battery powered. However, frequent battery replacement poses a big limitation on wide deployment. In this paper, the authors investigate the construction of a WSN system for intelligent building environment monitoring in green high performance buildings powered through harvesting the indoor ambient light energy. A temperature sensor array was employed to demonstrate the feasibility of infinite lifetime operation of a WSN system by harvesting the indoor light energy as the power source.

1. INTRODUCTION

According to the U.S. Green Building Council, buildings account for 39% of CO_2 emission and consume 70% of the electricity load in the United States. Much of these emissions and energy usage could be eliminated through increased energy efficiency when providing heating, cooling, and lighting [1]. In practice, even a small adjustment to the operation of HVAC systems could result in significant reduction of energy consumption and operating cost. Emerging wireless senor networks (WSN) provide an intelligent solution to control and management of the building environment by adjusting temperature, CO_2 level, artificial lighting, and humidity to changing conditions [2-3]. It has been found that the deployment of WSN control systems can lead to around 20% savings in energy usage and play a crucial role in green buildings [8]. From the building maintenance perspective, these intelligent WSN systems are often required to operate for several years without the need for battery replacement, because frequent battery replacement may be infeasible (e.g. sensor nodes are embedded in a building structure) or prohibitively expensive (e.g. in a large sensor network). To simplify installation, retrofit WSN systems are usually battery powered. However, a conventional battery has limited energy capacity (hence short battery lifetime), large volume comparing with other system components, and finite recharging cycles. Batteries are difficult and labor expensive to be replaced or recharged regularly. For example, two AA batteries can only last a few months for running a typical sensor node. Thus, battery integration poses a big limitation on wide deployment of such retrofit applications for intelligent building management. As a result, a key challenge in these WSN systems is to efficiently provide the required power for achieving long-lived, maintenance-free operation.

Environmental energy harvesting is an attractive option to alleviate the power supply challenges in these systems [4-5]. Ambient existing energy sources such as light, heat or vibration have the potential to achieve self-powered,

perpetual system operation and eliminate the expensive labor cost required for regular battery replacement. Among these options, light energy harvesting is the most practical due to high power density and the ubiquitous nature of light. In addition to greatly decreasing the cost associated with frequent battery replacement, micro-scale light energy harvesting also provides significant environmental benefits. For example, every year millions of discarded electrochemical batteries result in a long-term threat and pollution to groundwater and soils. The use of energy harvesting technique to successfully power wireless sensor nodes helps to reduce the number of batteries deposited into environment.

Systems that harvest outdoor sunlight to support WSN systems have been prototyped (e. g. Helimote module by UCLA [6]). This outdoor light harvesting wireless sensor node has been commercialized by Alta Inc. and deployed in the USA, Switzerland, and India. However, strong light conditions are rare or hard to access inside a building (e.g. a room that does not have a window to the outside). In these conditions, the most accessible light is either from a light bulb nearby or from very weak scattered sunlight. In these relatively weaker light conditions (compared to outdoor strong sunlight), conventional light harvesting systems that are designed for strong light irradiance show very low efficiency or are probably unable to work at all.

In this paper, the feasibility of indoor light energy harvesting to support the deployment of smart wireless sensor nodes for intelligent building environment monitoring is investigated. The authors have implemented a WSN system for collecting environmental temperature values in the Department of Building Construction Management (BCM) of Purdue University. A cutting-edge small area (2.25 in × 2.25 in) photovoltaic cell was used for indoor ambient light energy conversion and the WSN system was tested in various indoor light conditions (i.e. different light intensities). Results have validated the feasibility of harnessing indoor light energy to power WSN systems for self-powered operation.

2. BUILDING ENVIRONMENT MANAGEMENT

The motivation for green buildings is to reduce the impact of buildings on the environment. The design of green buildings mainly takes into account the following few aspects: energy efficiency, water efficiency, material efficiency, cost, indoor environmental quality, maintenance optimization and so on. Most people agree that a green building must be an energy efficient building. Comprehensive understanding and efficient adjustment of building operation is estimated to lead to a 20% reduction of energy consumption [8].

Inefficient operation of the existing HVAC equipments results in remarkable energy consumption and loss. To optimize the operation parameters of the HVAC equipment, manual measurements and sampling is usually conducted by engineers. However, in addition to the accompanied expensive labor cost, the limited sampled data is insufficient for dynamic optimization of the HVAC operation. Therefore, the design of real-time building environment monitoring systems is a hot research topic in both academic and industrial communities. Unfortunately, conventional design and construction of buildings generally does not allow for the real-time monitoring of the building environmental status (e.g. illumination, temperature, humidity) required for dynamic optimization.

One promising approach to improve the building operation efficiency is deployment of a distributed sensor network inside buildings and sensing the local environmental status required for dynamic optimization. With the advances of micro-sensor fabrication technology, sensor nodes have been getting smaller, smarter and cheaper. As a consequence, it is feasible to distribute tens or hundreds of tiny sensor nodes inside a building for sensing the building operation status of each interesting position. The operation status data retained by each sensor node can be transmitted to a central control computer by using either wired (i.e. cable connected) or wireless technology. The building maintenance personnel in the control room or the automated control computer are responsible for adjusting the HVAC systems to optimize the environmental living quality and reduce energy consumption. Wireless data transmission has several advantages over the wired approach in terms of flexibility, ease of deployment, and low installation cost, especially for large and complex buildings. As a result, the wireless sensor network has emerged as an enabling platform for cost effective and user convenient sensing, monitoring, and communication in high performance green buildings.

To date, there have been several WSN systems proposed for building environment monitoring applications in the literature [9-12]. Chiara (2010) presented a WSN system to achieve minimum energy consumption and optimize the energy use in buildings. Charles et al. (2009) presented a WSN based temperature sensing and control system for smart homes. This work is probably the first design of temperature control schemes using geostatistical analysis

method. Tessa et al., (2009) utilized a WSN system to enable the Passive House standard, and illustrated the importance of using WSN technologies for indoor environmental status monitoring. Antony et al., (2009) targeted the reliable deployment of WSN systems in buildings and developed an assistant design tool.

None of the systems in the above discussion utilized an environmental energy harvesting technique to power a current WSN design for building environment monitoring. Thus, the operation of each of the described wireless sensor node systems heavily depends on the remaining energy of its associated battery. Due to the small size constraints of the sensor node, battery size is very limited and can only last several months. As a result, the resultant labor cost for frequent battery replacement is prohibitively expensive. The focus of this paper is to investigate the feasibility of harvesting environmental light energy as the power source for each sensor node, thus, eliminating the requirement of frequent battery replacement.

3. SELF-POWERED WIRELESS SENSOR SYSTEM

To verify the proposed idea, the authors implemented a wireless sensor network system in the 4th floor of Knoy Hall at Purdue University in March 2010. The wireless sensor node utilized in this demonstration was based on off-the-shelf components developed from Texas Instruments [13]. Instead of integration of battery packs within each sensor node, a small piece of high efficiency solar panel is used as the energy transducer.

3.1 WSN System Architecture

The experiment was composed of multiple compact wireless sensor nodes, one wireless access point, and a central control computer. These sensor nodes were distributed in the 4th floor of Knoy Hall to periodically acquire the real-time temperature values nearby. Through a wireless link, these temperature values were transmitted to the access point and then displayed in the central control computer for observation and analysis. The entire system architecture is illustrated in Figure 1.

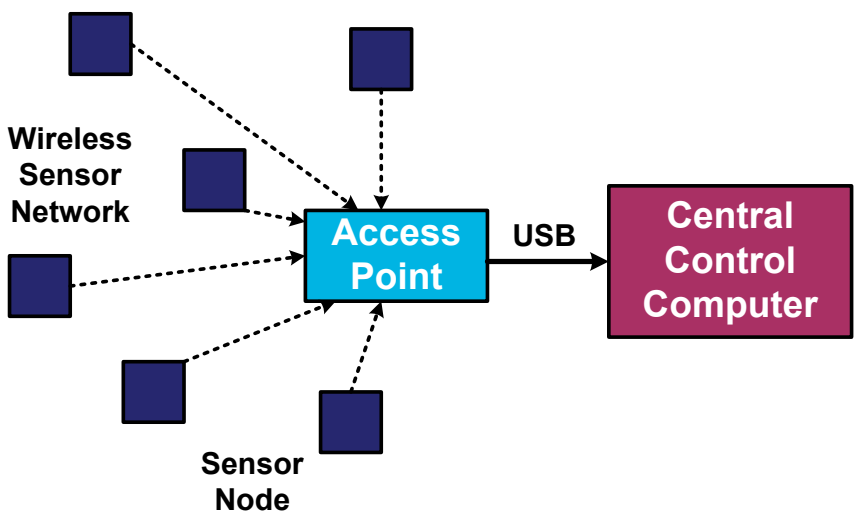

Figure 1: WSN System Architecture for Building Environment Monitoring

3.2 Wireless Sensor Node

For sensing purposes, the authors used eZ430-RF2500-SEH sensor nodes from Texas Instruments, as shown in Figure 2. This board is equipped with low power devices such as a MSP430F2274 microcontroller and a CC2500 2.4 GHz wireless transceiver. The entire board also integrates a high efficiency solar panel (2.25 in × 2.25 in), which converts ambient light energy into electrical energy that provides harvested power to sustain the whole sensor operation. The product datasheet reports that the minimum operating light intensity is as low as 200Lux, which is above the common light intensities found in most offices. Each node module may contain multiple sensors for measuring parameters such as temperature, humidity, or illumination. For a simple demonstration of our proposed idea, the authors integrated a temperature sensor on this board.

3.3 Access Point

The access point consists of a wireless transceiver (CC2500 chip), a MSP430F2274 microcontroller, and a USB interface. The function of an access point is to receive the data transmitted from each sensor node and pass these data to the central control computer through USB connection. The entire hardware structure for an access point is shown in Figure 2.

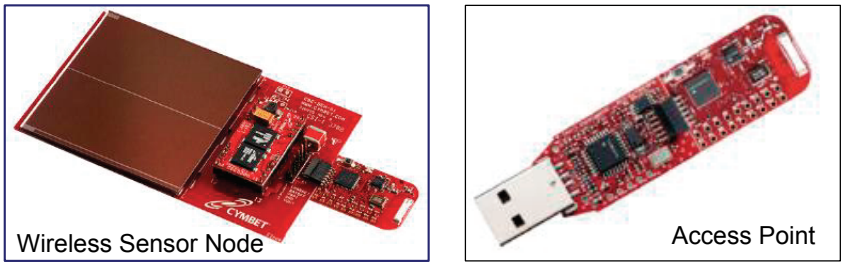

Figure 2: Wireless Sensor Node and Access Point for the Experiment

3.4 Software Interface

Texas Instruments provides computer based software that allows interaction with sensor nodes for effective data retrieval and analysis, as well as reprogramming of the network configuration. The status of each deployed sensor node is able to be displayed in a graphical representation style. In addition, this interface also supports the storage of the received data in a text format. This option is very useful for searching a specific node's status and data analysis afterwards.

3.5 WSN System Floor Plan

The floor plan of the experiment performed in the 4th floor of Knoy Hall is depicted in Figure 3. The layout dimensions of the sensor network and corresponding light intensity near each sensor node are marked in this figure.

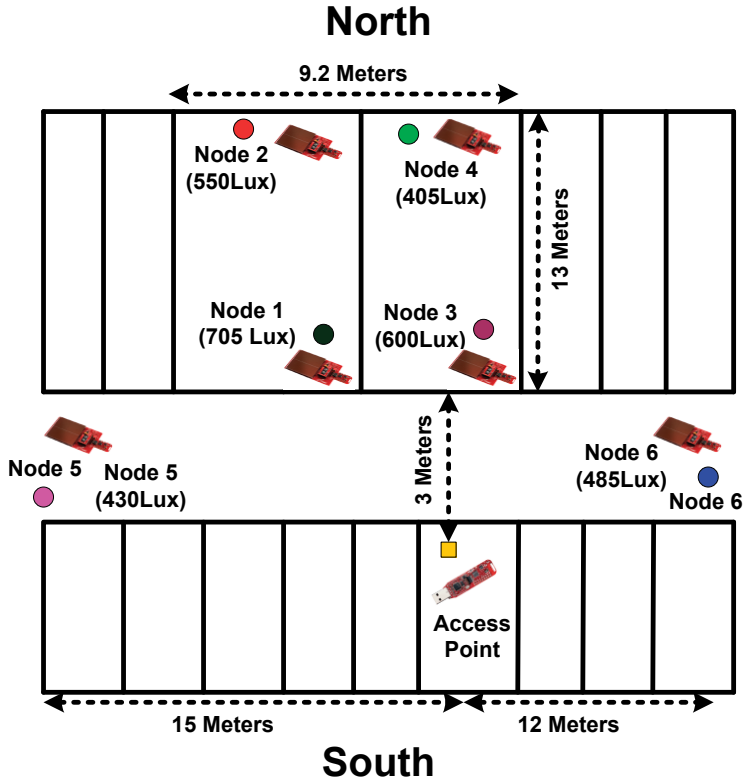

Figure 3: Wireless Sensor Node System Floor Plan

4. RESULTS

The authors set up the battery-less WSN system for environmental temperature monitoring on the 4th floor of a Purdue University classroom building. As an example shown in Figure 4, a wireless sensor node is attached on the surface of a wall. There is no window to the outside world and hence the ceiling mounted light fixture in the room is the ambient energy source for this node. Figure 4 also shows the central control computer utilized in the demonstration as well as the USB access point module. The measured temperature value near each distributed sensor node is displayed on the computer screen for easy observation. Each yellow icon depicted on the computer screen indicates a sensor node that is communicating with the access point which is symbolized by the red icon in the center. Data samples were continuously collected, stored, and updated in the control computer for three days.

To study the impact of different light levels, some sensor nodes were moved to dim places where the light conditions were much lower. It was observed from the control computer that their corresponding yellow icons disappeared after a few minutes. This phenomenon implied that these sensor nodes stopped signal transmission after running out of their remaining power. On rare occasions during the three-day demonstration, we observed that one or two sensor nodes were not able to connect with the access point. The reason is because the light irradiance to a particular sensor node was temporarily shadowed by people walking around. When the individuals walked out, the sensor node was able to reconnect to the access point after a few minutes delay. The demonstration also revealed that the maximum reliable communication distance from a sensor node to the access point was 16 meters (from node 4 to the access point shown in Figure 3). The presence of walls or doors between nodes and the access point did not appear to significantly degrade wireless transmission.

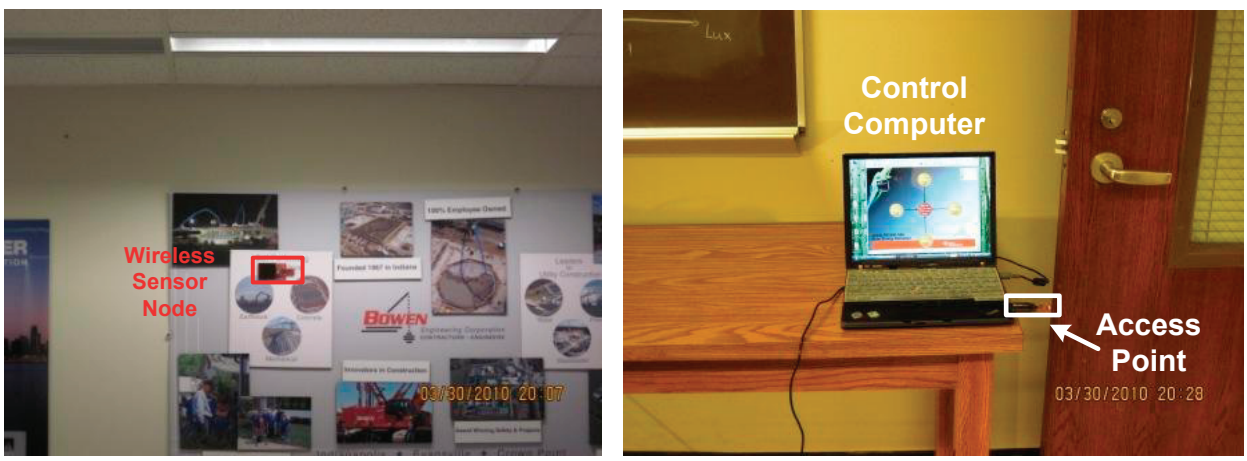

Figure 4: Position of a Wireless Sensor Node and the Photo of a Central Control Computer

6. CONCLUSIONS

The design of energy efficient green buildings is an active area of research. Distributed use of a wireless sensor network is a promising solution to optimizing control and management of the operation of a building's HVAC systems. A key challenge in existing WSN systems is to efficiently provide energy to each sensor node. Conventional battery powered systems are not a cost-effective and feasible approach for large or complex buildings. Therefore, the authors propose the harvest of environmental light energy as the power source for individual sensor nodes. To verify the potential of the proposed idea, a demonstration at Purdue University was conducted. The results substantiate the concept of harvesting ambient light energy through a tiny solar cell for this purpose. More extensive field testing is suggested to verify the feasibility of a WSN system to achieve long-lived, maintenance-free operation.

REFERENCES

[1] U.S. Green Building Council website: http://www.usgbc.org/
[2] Karsten, M., Dirk, P., Brendan, F., Marcus, K., Cian, M., 2008, Towards a Wireless Sensor Platform for Energy Efficient Building Operation, *Tsinghua Science and Technology*, vol. 13, p. 381-386.
[3] Tessa, D., Elena, G., James, B., 2009, Wireless Sensor Networks to Enable the Passive House-Deployment Experiences, *European Conference on Smart Sensing and Context*, p. 177-192.
[4] Loreto, M., Francesc, M., 2005, Review of Energy Harvesting Techniques and Applications for Microelectronics, *Proc. of the SPIE Microtechnologies for the New Millennium*, p. 359-373.
[5] Chao, L., Vijay, R., Kaushik, R., 2010, Micro-Scale Energy Harvesting: A System Design Perspective, *IEEE Asia and South Pacific Design Automation Conference*, p. 89-94.
[6] Vijay, R., Aman, K., Jason, H., Jonathan, F., Mani, S., 2005, Design consideration for solar energy harvesting wireless embedded systems, *Information Processing in Sensor Networks*, p. 457–462.
[7] Jumphon, L., Seunghyun, Y., Jinwon, C., Developing a Building Energy Management Framework Based on Ubiquitous Sensor Networks, *Journal of Indoor and Built Environment*, vol. 12, p. 192-201.
[8] James, D., Marcus, K., Vladimir, B., 2008, Specification of an Information Delivery Tool to Support Optimal Holistic Environmental and Energy Management in Buildings, *National Conference of IBPSA-USA*, p. 61-68.
[9] Chiara, B., 2010, An IEEE 802.15.4 Wireless Sensor Network for Energy Efficient Buildings, Chapter 4, *In:* Alberto, F., Roberto, V., *The Internet of Things*, Springer, New York, p. 329-338.
[10] Charles, C., Jeffrey, F., Asad, D., Ruei, C., 2009, Temperature Control Framework Using Wireless Sensor Networks and Geostatistical Analysis for Total Spatial Awareness, *10th International Symposium on Pervasive Systems, Algorithms, and Networks*, p. 717-721.
[11] Tessa, D., Elena, G., James, B., 2009, Wireless Sensor Networks to Enable the Passive House – Deployment Experiences, *European Conference on Smart Sensing and Context*, p. 177-192.
[12] Antony, G., Alan, G., Dirk, P., 2009, A Wireless Sensor Network Design Tool to Support Building Energy Management, *ACM Workshop on Embedded Sensing Systems for Energy-Efficiency In Buildings*.
[13] EZ430-RF2500-SHE Solar Energy Harvesting Development Tool.

ACKNOWLEDGEMENT

This work was supported by Graduate Advisory Committee (GAC) Fellowship, Purdue University. The authors appreciate Professor Robert Cox, the Head of Department of Building Construction Management of Purdue University for funding the testing instruments and providing many helpful discussions.